# G876 OWNER'S MANUAL CONTENTS


1. INTRODUCTION ..... 3

2. SAFETY PRECAUTIONS ..... 4

3. WARNING LABLE POSITION ..... 6

4. LIST OF PARTS ..... 7

5. ASSEMBLE THE PRODUCT ..... 9
STEP 1 Install the Main Frame ..... 9
STEP 2 Install the Moving Parts ..... 10
STEP 3 Install the Support Tubes ..... 12
STEP 4 Install the Stationary Handlebar ..... 13
STEP 5 Install the Console ..... 14
STEP 6 Install the Pedals ..... 15
STEP 7 Install the Pedestal Covers ..... 16
STEP 8 Move the Product into Place ..... 17
STEP 9 Level the Product ..... 18
STEP 10 Power Cord Assembly ..... 19
STEP 11 Beware of Moving Parts ..... 20
STEP 12 Essential Functions Guide ..... 21
STEP 13 Power Supply Protection(Circuit Breaker) ..... 22

6. UNDERSTAND THE G876 DISPLAY ..... 23
DISPLAY Overview ..... 23
DISPLAY Console Panel ..... 23
DISPLAY Windows Display ..... 25
DISPLAY Specifications ..... 26

7. OPERATE THE PRODUCT ..... 27
OPERATION Safe Operating Area ..... 27
OPERATION Safely Get On/Off ..... 28
OPERATION Proper Workout Position ..... 29
OPERATION Start Screen ..... 30
OPERATION Quick Start ..... 30
OPERATION User Setting Procedure ..... 30
OPERATION Workout Programs ..... 32
OPERATION During Exercise ..... 34
OPERATION Cool Down ..... 35
OPERATION Stop and Pause Exercise ..... 35
OPERATION Workout Summary ..... 35
OPERATION Idle Mode ..... 36
OPERATION Energy Smart Function ..... 36
OPERATION User Parameter Setting ..... 37

8. ABOUT HEART RATE DETECTION ..... 39
HEART RATE Telemetry ..... 39
HEART RATE Contact ..... 39

# G876 OWNER'S MANUAL CONTENTS

9. GUIDELINES FOR EXERCISE ..... 40

10. Micro Inverter MI-250 ..... 41
MICRO INVERTER Important Safety Instructions ..... 41
MICRO INVERTER Cautionary Messages ..... 41
MICRO INVERTER Electronic Specifications ..... 42
MICRO INVERTER Circuit Board & Product Settings ..... 43

11. MAINTENANCE ..... 46
MAINTENANCE Safety Precautions ..... 46
MAINTENANCE Error Messages ..... 47
MAINTENANCE Lubrication ..... 49
MAINTENANCE Lubrication Procedure ..... 49
MAINTENANCE Cleaning the Glide Rails ..... 50
MAINTENANCE Schedule ..... 51

12. ACCESSORIES ..... 52
ACCESSORIES Standard ..... 52
ACCESSORIES Option ..... 53
ACCESSORIES MYE Wireless TV Audio_Channel Receivers ..... 55

13. APPENDIXES ..... 56
APPENDIXES Specifications ..... 56
APPENDIXES Electronics Block Diagram ..... 57
APPENDIXES Exploded Diagrams..... 58
APPENDIXES Disassembly ..... 61

# 1. INTRODUCTION

Congratulations on the purchase of a high quality SportsArt product, the G876 Elliptical trainer. Constructed of high quality materials and designed for years of reliable performance, this product was made for full commercial use.

Before this product is assembled or operated, we recommend that you familiarize yourself with this manual. Understanding the correct assembly and operation of this product will help ensure that exercisers obtain their fitness goals safely and successfully.

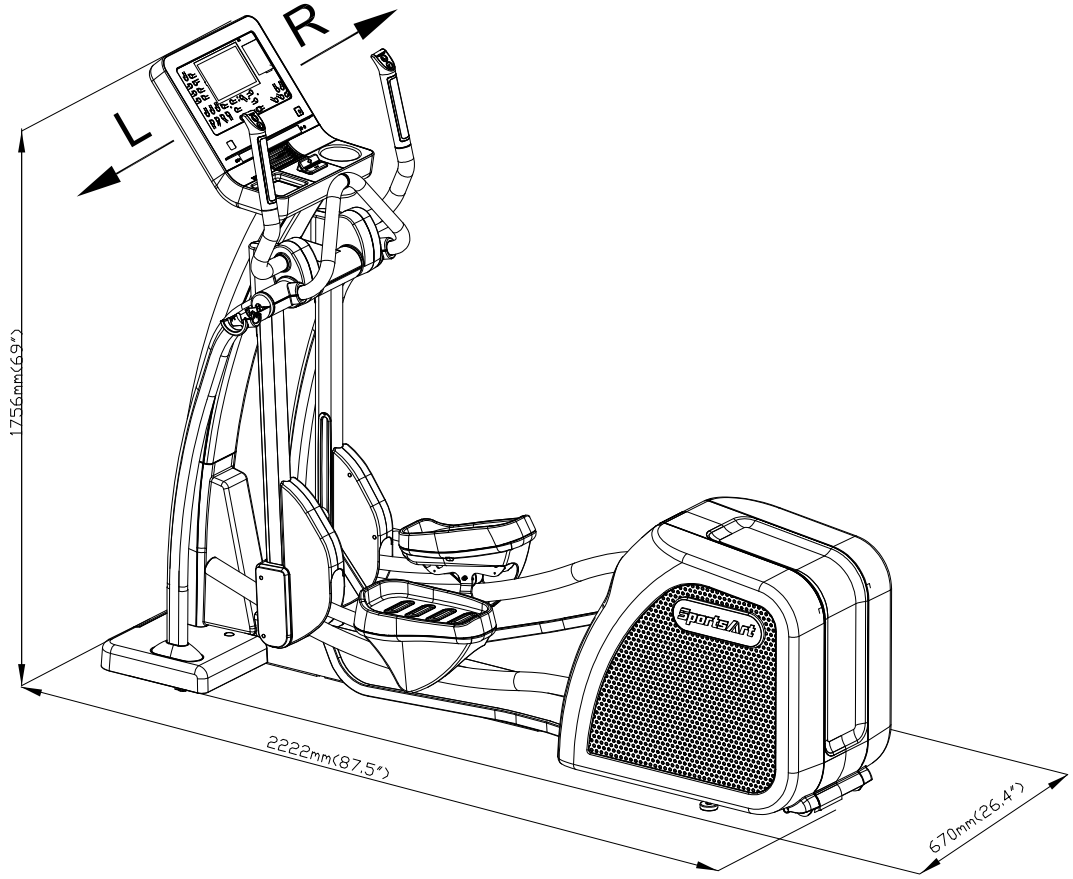

## 2. SAFETY PRECAUTIONS

Your SportsArt elliptical trainer was designed and built for optimum safety. However certain precautions apply whenever you use your elliptical trainer.

Please read the entire manual before assembly and operation. Also, please note the following safety precautions:

- Please read the instructions carefully and install the elliptical trainer as instructed.
- Assemble and operate the elliptical trainer on a solid, level surface. DO NOT use outdoors or near water.
- Check the elliptical trainer before every use. Make sure all parts are assembled, and all fasteners are tightened. DO NOT use the elliptical trainer if the unit is disassembled in any way.
- Keep your hands away from moving parts.
- Wear proper workout clothing; DO NOT wear loose clothing. DO NOT wear shoes with leather soles or high heels. Tie all long hair back. DO NOT go barefoot on this product.
- Be careful when mounting and dismounting the unit.
- The elliptical trainer may or may not stop immediately if an object becomes caught or impedes normal motion.
- Do not use accessories or parts that are not specifically recommended by the manufacturer (SportsArt). Such parts might cause injuries or cause the unit to fail and void the warranty. We are not responsible for any safety issue that arises due to the misuse of accessories or parts. At the same time, we will terminate the warranty terms of this equipment.
- Close supervision is necessary when this elliptical trainer is used by, on, or near children 12 or younger, invalids, or disabled persons.
- Use this elliptical trainer only for its intended use as described in this manual.
- Never operate this elliptical trainer if it has been damaged in any way. If it is not working properly, or has been dropped or damaged, contact your dealer.
- Keep all air ventilation areas free of blockage.
- Never drop or insert any object into any opening.
- DO NOT operate where aerosol (spray) products are being used or where oxygen is being administered.
- The general user weight limit for this elliptical trainer is 150kg (330lb).
- Contact your SportsArt representatives on all materials damaged in shipment. (Note: Shipping damages are the responsibility of the carrier.)
- Unpack and verify contents of boxes according to the list of parts to check if any parts are missing.

## 2. SAFETY PRECAUTIONS (CONTINUED)

- This elliptical trainer is not intended for use by persons (including children 12 or younger) with reduced physical, sensory or mental capabilities, or lack of experience and knowledge, unless they have been given supervision or instruction concerning use of this elliptical trainer by a person responsible for their safety.
- Children 12 or younger should be supervised to ensure that they do not play on or near the product.
- Maintenance and repair must be performed by trained service personnel only. Improper maintenance would not only damage the machine, but may also may present a danger to the exerciser.
- Warning that any of the adjustment devices that could interfere with the user's movement should not be left projecting.
- To reduce the risk of injury from moving parts of electric shock, unplug before cleaning or servicing.
- WARNING — This stationary training equipment is not suitable for high accuracy purposes.

**Caution**

If you feel any pain or abnormal sensation, STOP YOUR WORKOUT and consult your physician immediately. Work within your recommended exercise level. DO NOT work to exhaustion.

Before beginning any exercise program, you should consult with your doctor. It is recommended that you undergo a complete physical examination.

DO NOT step onto the highest footplate. While holding onto supports for stability, step onto the lowest footplate.

Note: This equipment has been tested and found to comply with the limits for a digital device, pursuant to part 15 of the FCC Rules. These limits are designed to provide reasonable protection against harmful interference in a residential installation. This equipment generates, uses, and can radiate radio frequency energy and, if not installed and used in accordance with the instructions, may cause harmful interference to radio communications. However, there is no guarantee that interference will not occur in a particular installation. If the user desires to correct such interference, it is at the user's own expense.

**Warning**

Heart rate monitoring systems may be inaccurate. Over exercise may result in serious injury or death. If you feel faint, stop exercise immediately.

## 3. WARNING LABLE POSITION

If you are in a Non-English speaking country, you can attach the warning label to the console panel as shown, otherwise, you can also stick it on a place where is clear and obvious. (please use the French version label in French-Speaking areas in North America, and the label will not be included in the other regions.)

Note: Depending on the model, the appearance of the console is different, but the labeling position is the same.

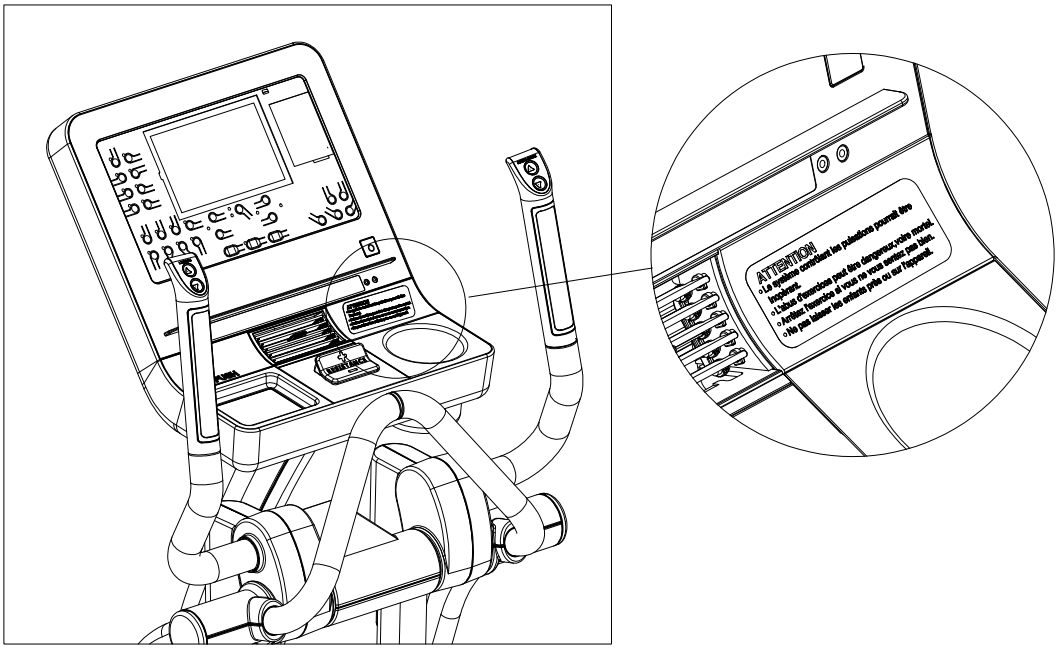

# 4. LIST OF PARTS

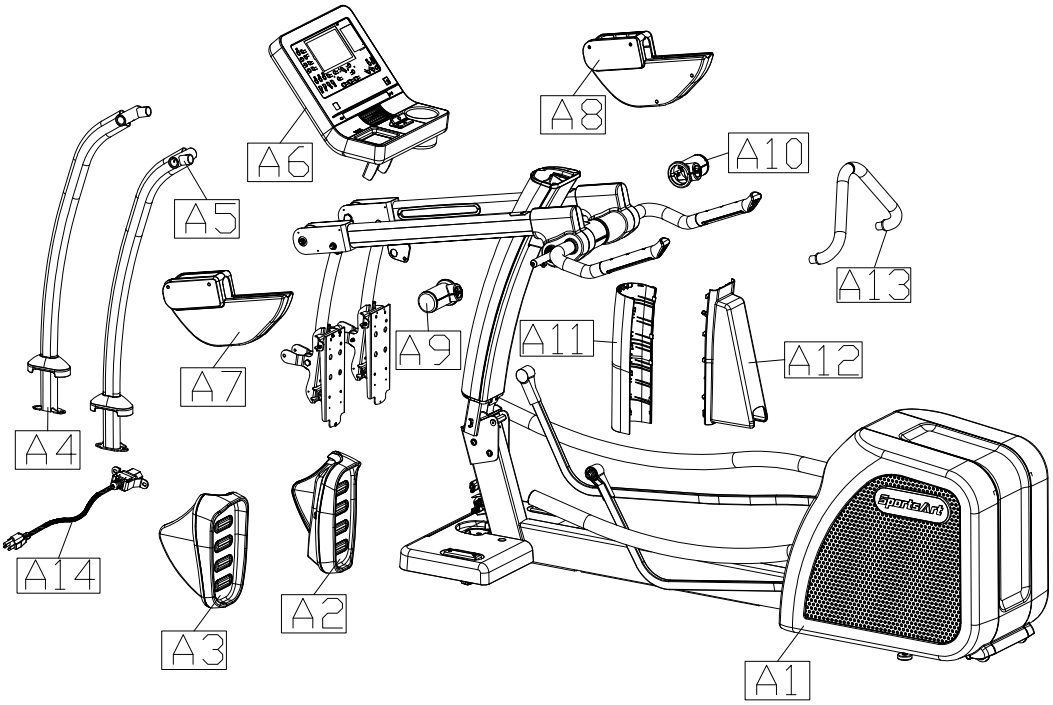


| Assembly Parts | | | | | |
|---|---|---|---|---|---|
| **No.** | **Name** | **Qty.** | **No.** | **Name** | **Qty.** |
| A1 | Main frame | 1 | A8 | Right roller cover | 1 |
| A2 | Right pedal | 1 | A9 | Left joint cover | 1 |
| A3 | Left pedal | 1 | A10 | Right joint cover | 1 |
| A4 | Left support tube | 1 | A11 | Pedestal cover B | 1 |
| A5 | Right support tube | 1 | A12 | Pedestal cover E | 1 |
| A6 | Console | 2 | A13 | Stationary handlebar | 1 |
| A7 | Left roller cover | 1 | A14 | Power cord | 1 |

# 4. LIST OF PARTS (CONTINUED)

| TOOLS KIT | | | | |
|---|---|---|---|---|
| **No.** | **Name** | **Qty.** | **Specification** | **Notes** |
| 10 | Inner hex screw | 6 | M10*P1.5*L25 | |
| | Spring washer | 6 | M10 | |
| | Washer | 6 | D21*d10.5*t1.5 | |
| 11 | Stride adjustment linkage cover | 2 | | |
| 12 | Hex nut | 2 | M10*P1.5 | |
| | Stopper | 2 | Ø30-30 | |
| 13 | Secondary roller bolt | 2 | D9.96*L67 | |
| | Self-lubricating bushing | 4 | | |
| | Secondary roller | 2 | D58*t23 | |
| | L-shaped Allen wrench | 1 | M4 | |
| | L-shaped Allen wrench | 1 | M5 | |
| | T-shaped Allen Wrench | 1 | M6*L108 | |
| | Double Open-End Wrench | 1 | 8mm*17mm | |
| | Double Open-End Wrench | 1 | 14mm*15mm | |
| | Screwdriver handle | 1 | black | |
| | Screwdriver bit | 1 | Flat and Phillips | |

| Pre-Installed Hardware | | | |
|---|---|---|---|
| **No.** | **Name** | **Specification** | **Notes** |
| 21 | Phillips screw | M4*P0.7*L8 | |
| 22 | Inner hex screw | 5/16”*L2-1/4” half | |
| | Flat washer | D20*d8*t2.0 | |
| 23 | Inner hex screw | M6*L15 | |
| | Handlebar washer | D20*d7*t2.0 | |
| 24 | Mushroom top inner hex screw | M8*L15 | |
| | Flat washer | D17*d8.3*t2 | |
| | Spring washer | M8 | |
| 25 | Inner hex screw | M6*L15 | |
| | Handlebar washer | D20*d7*t2.0 | |
| 26 | Phillips screw | M5*P0.8*L15 | |
| 27 | Mushroom top Phillips screw | M5*0.8*L16 | |
| 28 | Pedestal cover | | |
| 29 | Inner hex screw | M8 | |
| 30 | Mushroom top philips screw | M4*L12 | |
| 31 | Mushroom top Phillips screw | M5*0.8*L15 | |
| 32 | Inner hex screw | M5*L16 | |
| 33 | Phillips Head Screw | M4*P0.7*L8 | |

# 5. ASSEMBLE THE PRODUCT

## STEP 1 Install the Main Frame

(a) Unfold the main frame (A1) and make it stand.

(b) Secure screws (10) to the main frame.

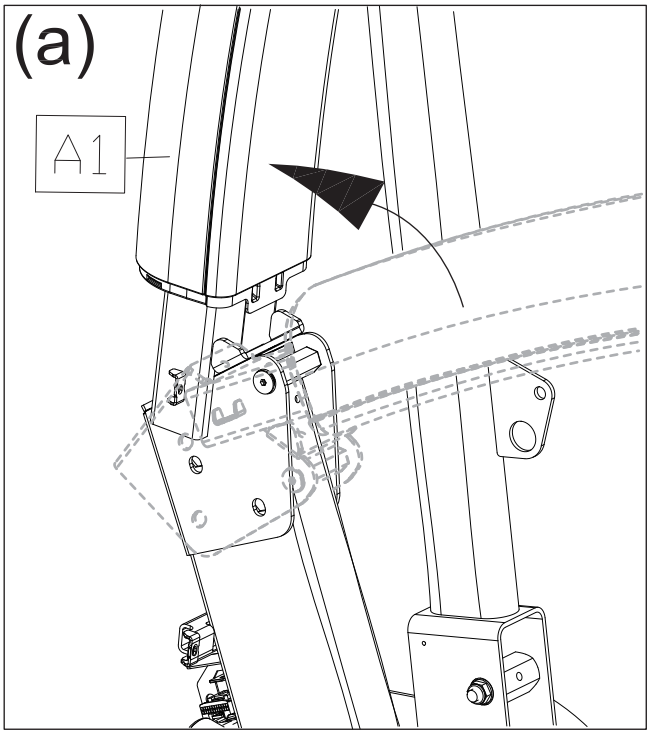


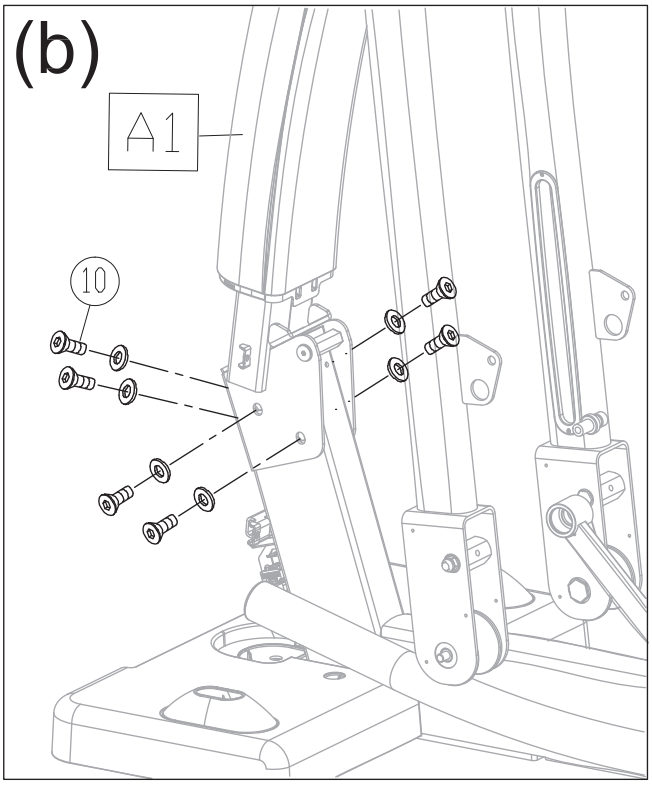

## STEP 2 Install the Moving Parts

Follow instructions (a) through (f) to install the moving parts.

(a) Remove screws (21) from the pedal arm attached to the main frame (A1).

(b) Slip the glide rail into (area A), then gently place the pedal carriage on the glide rail support.

(c)Connect the guide roller (13) on the bottom of the glide rail. (NOTE: insert the axle from the outside to the inside.)

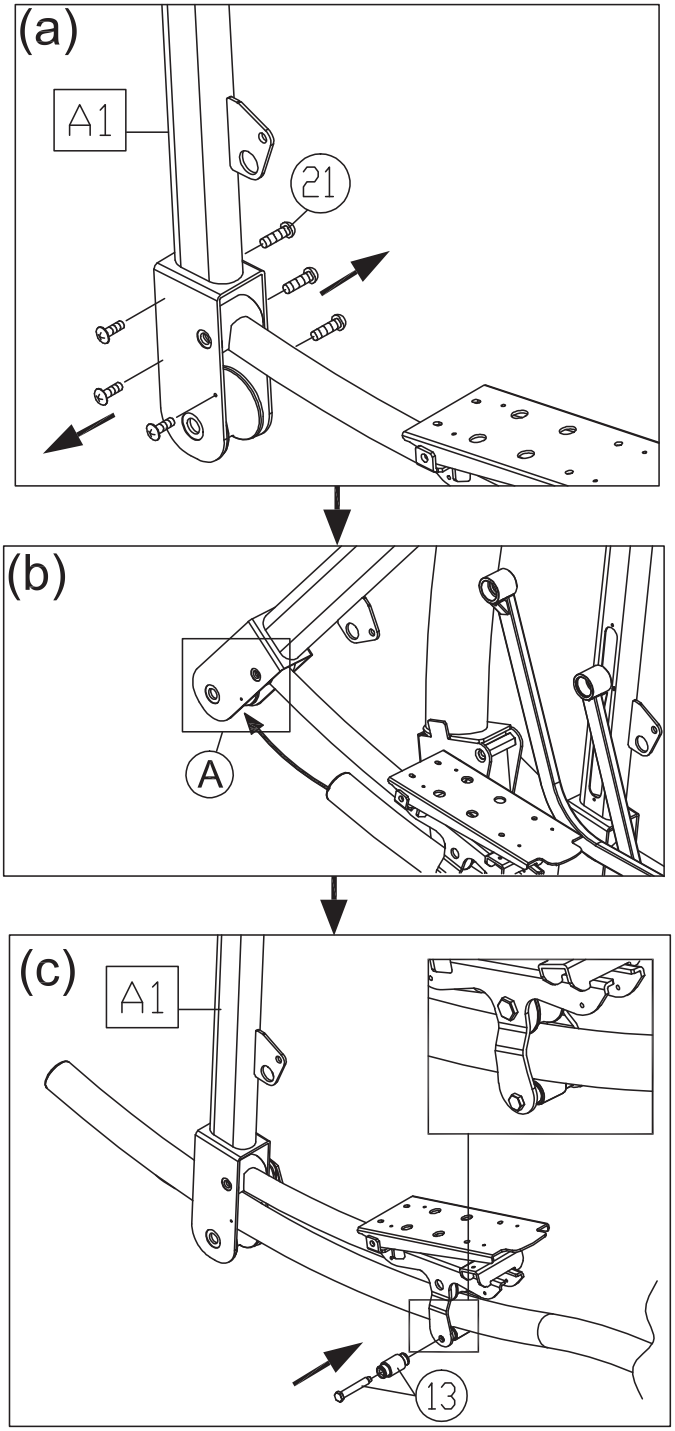

## STEP 2 Install the Moving Parts (Continued)

(d) Separate the roller covers (A7). Snap them together into place on the product. Then secure them with screws (21).

(e) On the left side of the product, remove the screw (22) from the stride adjustment linkage. Place the stride adjustment linkage into place on the bushing, and use the screw (22) to secure it into place. Then press the stride adjustment linkage cover (11) into place. (Note: Carry out the same procedure on the right side of the product as well.)

(f) Secure the stopper (12) to the front side of the glide rail on both sides of the product.

Consult the manual and follow all assembly instructions carefully. Please note that incorrect assembly may present a danger to the exerciser, will damage the elliptical and void the warranty.

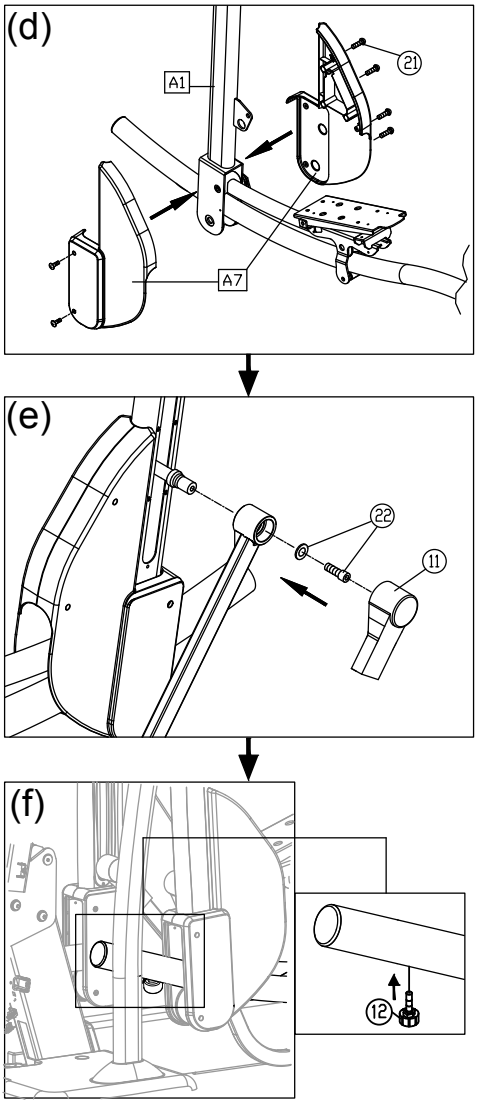

## STEP 3 Install the Support Tubes

Follow steps (a) through (b) to install the support tubes.

(a) Remove support tube screws (23) (24) from the main frame (A1).

(b) Insert left and right support tubes (A4,A5) into the axle area and base, and loosely secure them into place with screws (23) (24)

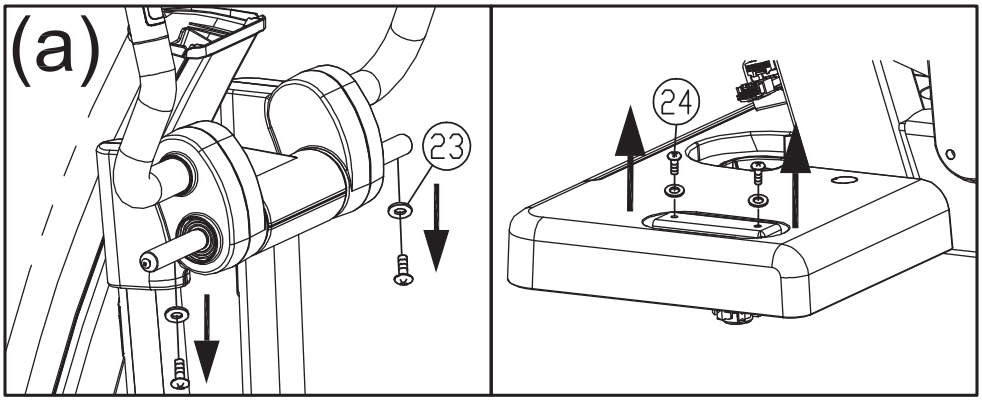


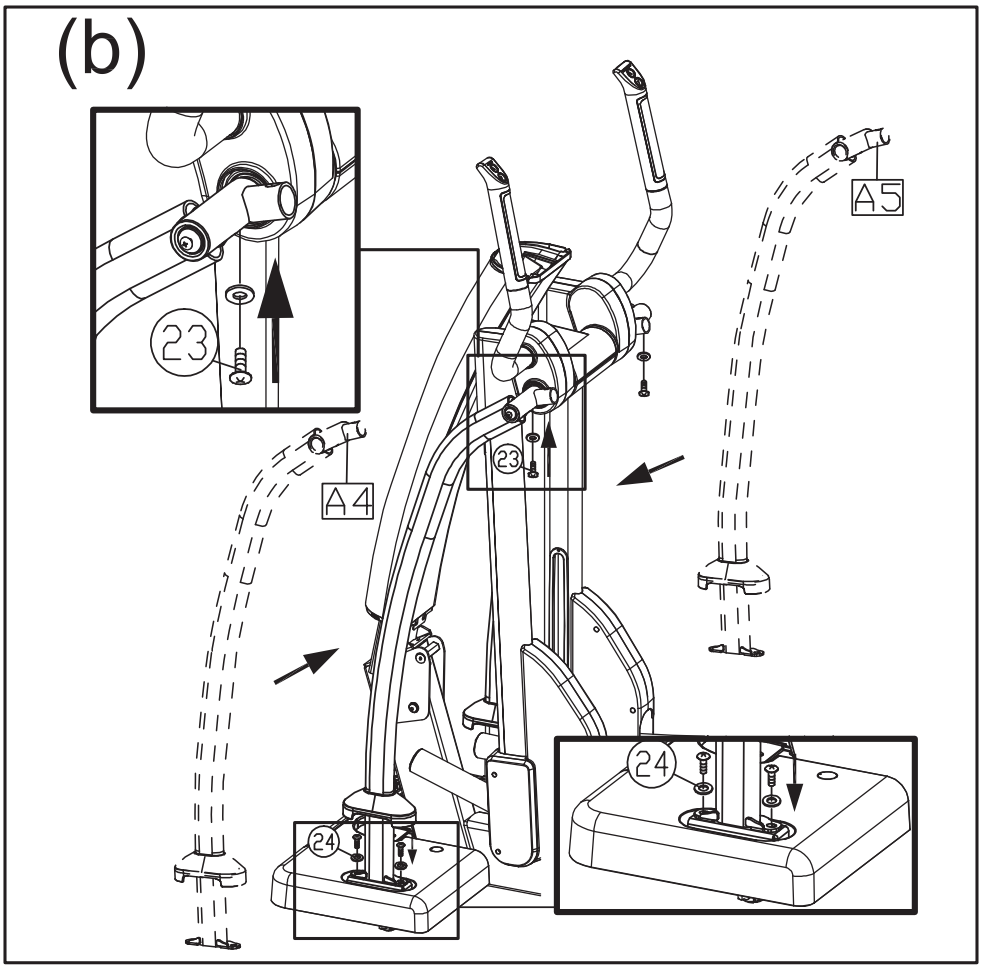

## STEP 4 Install the Stationary Handlebar

Follow instructions (a) through (c) to install the stationary handlebar and secure the support tubes.

(a) Remove screws (25) from the stationary handlebar (A13). Insert the stationary handlebar (A13) into place on the support tubes, and secure them with screw (25).

(b) Remove screws (26) from the sides of the left and right support tubes (A4) (A5). Snap joint covers (A9) (A10) together from top to bottom, and use screws (26) to secure them.

(c) Tightly secure screws in (area B), and insert the support tubes into the base frame by a straight downward push.

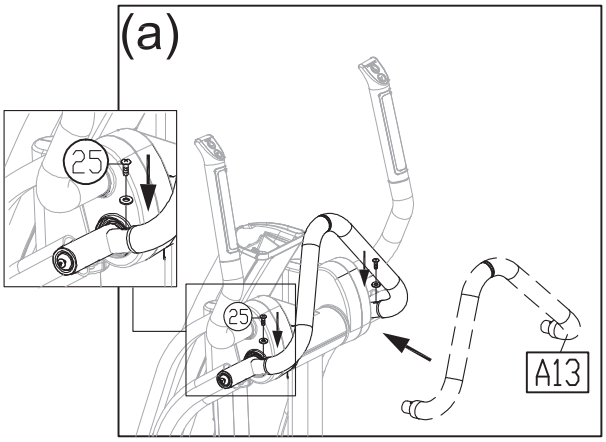


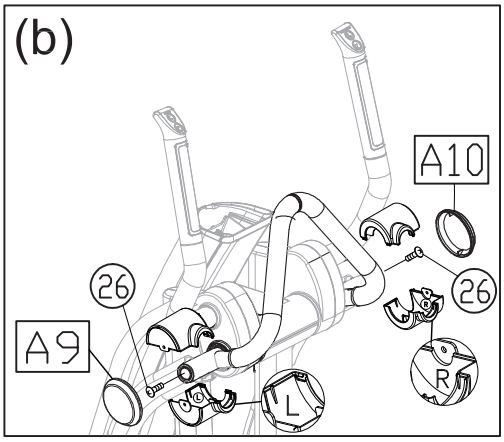


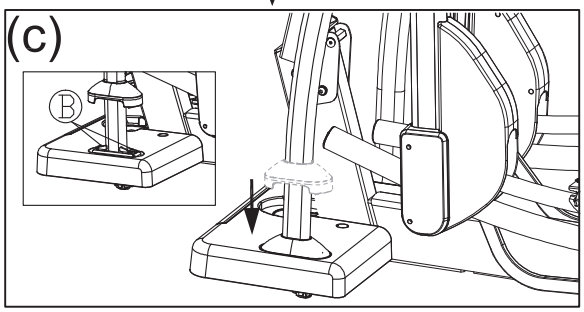

## STEP 5 Install the Console

Follow instructions (a) through (c) to install the console.

(a) Remove screws (27), then pull the pedestal cover (28) upward and remove it.

(b) Connect the cables of the console to the pedestal, and then secure the console into place with screw (29).

(c) Connect the cables of the main frame to the cables of the console (A6), and then tuck the cables back into the pedestal.

NOTE: Do not unpack the cables if the console is not secured.

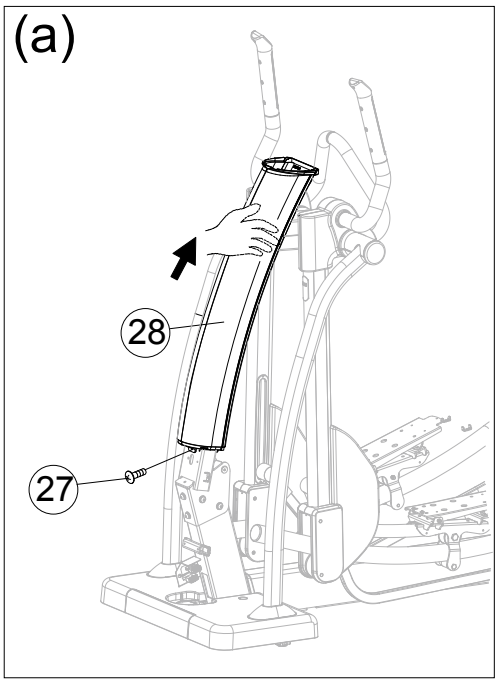


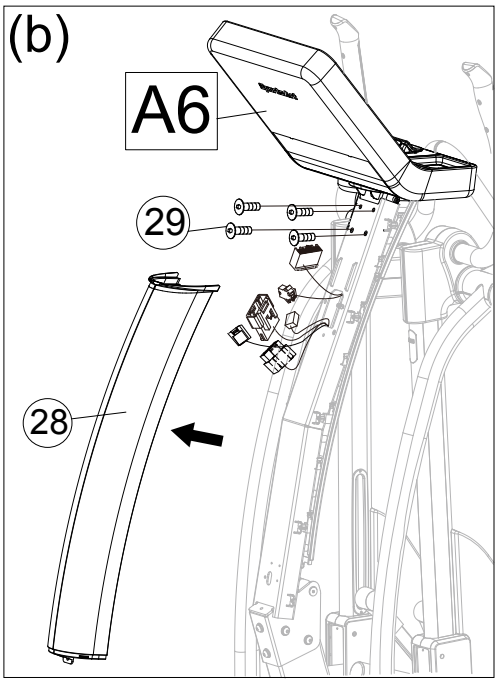


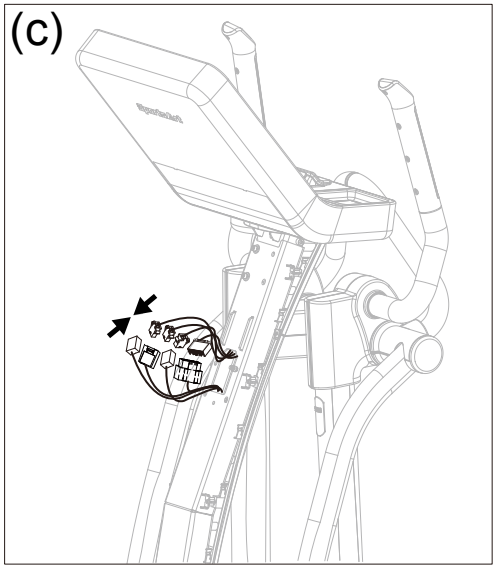

## STEP 6 Install the Pedals

Follow instructions (a) through (d) to install the pedals.

(a) Vertically split the right pedal (A2) with upper and lower halves, and then remove the non-slip pads on it. Repeat the same step with the left pedal.

(b) Install the lower half of the right pedal (A2) at a tilt angle as shown below, and then press it into place. Repeat the same step with the left pedal.

(c) Secure the lower half of the right pedal with screw (31), and be sure to secure the screws in the rectangular frame shown in figure (c) first. Repeat the same step with the left pedal.

(d) Align the upper half of the right pedal to the lower half, and secure them with screw (32), then install the non-slip pads to the upper half of the right pedal. Repeat the same step with the left pedal.

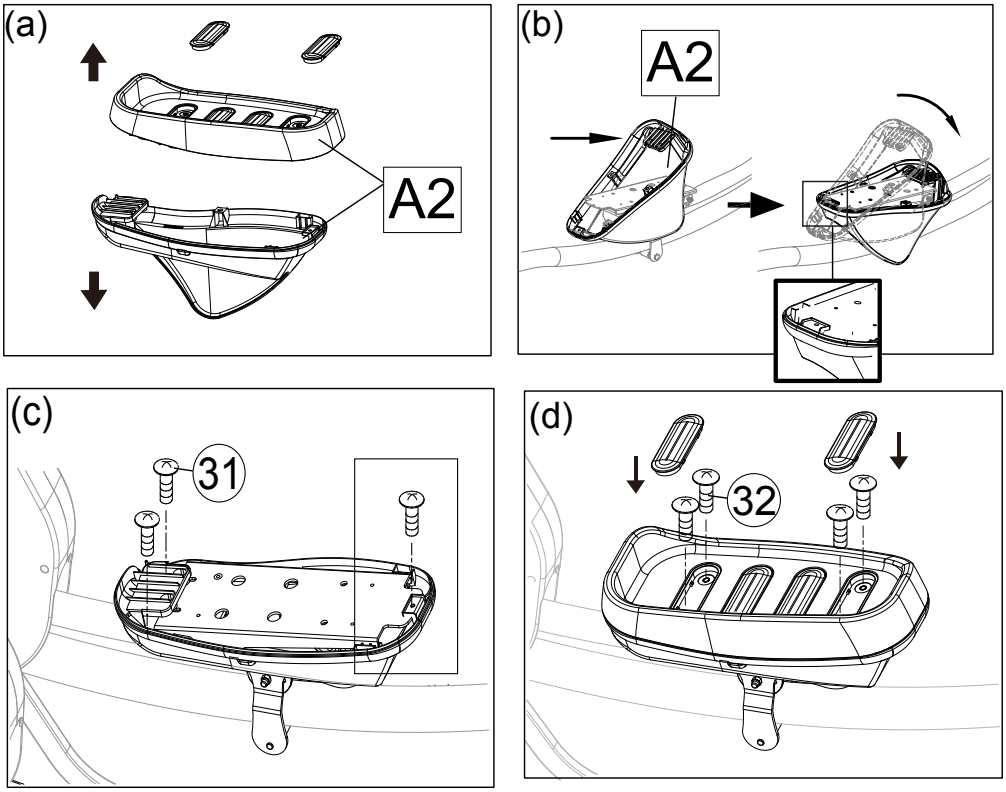

## STEP 7 Install the Pedestal Covers

Follow instructions (a) through (b) to install the pedestal covers.

(a) Insert the pedestal cover (28) to the console at a tilt angle as shown in figure (a), and then place the pedestal cover onto the mount by a downward push. Once it is locked completely, secure it with screw (27), and then secure the pedestal cover E (A12) with screw (30).

(b) Insert the pedestal cover B (A11) to the base frame at a tilt angle as shown in figure (b), and then engage the pedestal cover B with pedestal cover E (A12). Once it is locked completely, fix it firmly in position by an upward push.

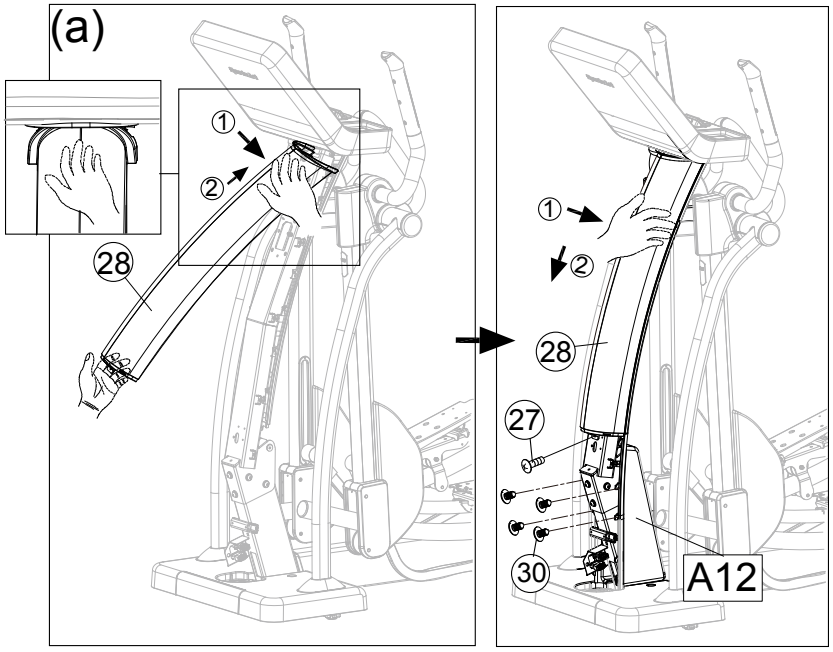


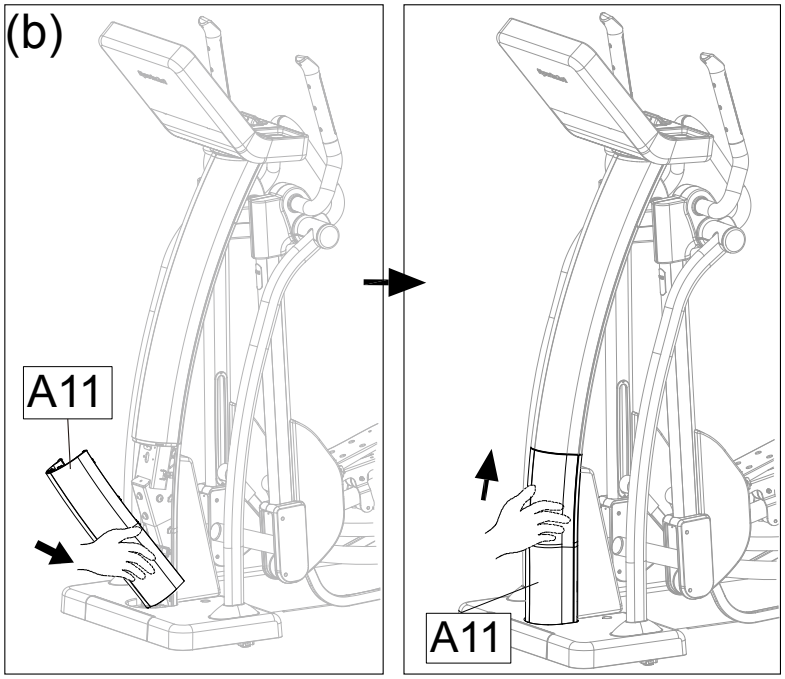

## STEP 8 Move the Product into Place

There are two techniques for moving this product.

(a) One person: Grip the front base of the product and lift upward, then push the product into location for use. Be careful to avoid pinching fingers when setting the product down.

(b) Two people: Have one person grip the front base of the product while the other person grips the support tubes . With both people lifting and stabilizing the unit, roll it into place for use. Be careful to avoid pinching fingers when setting the product down.

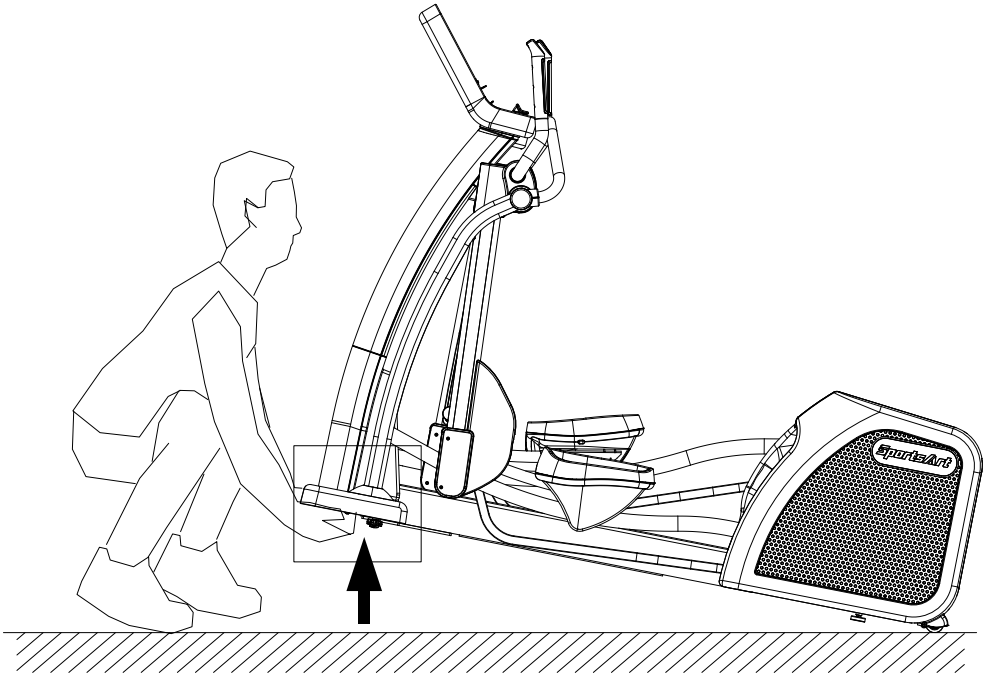


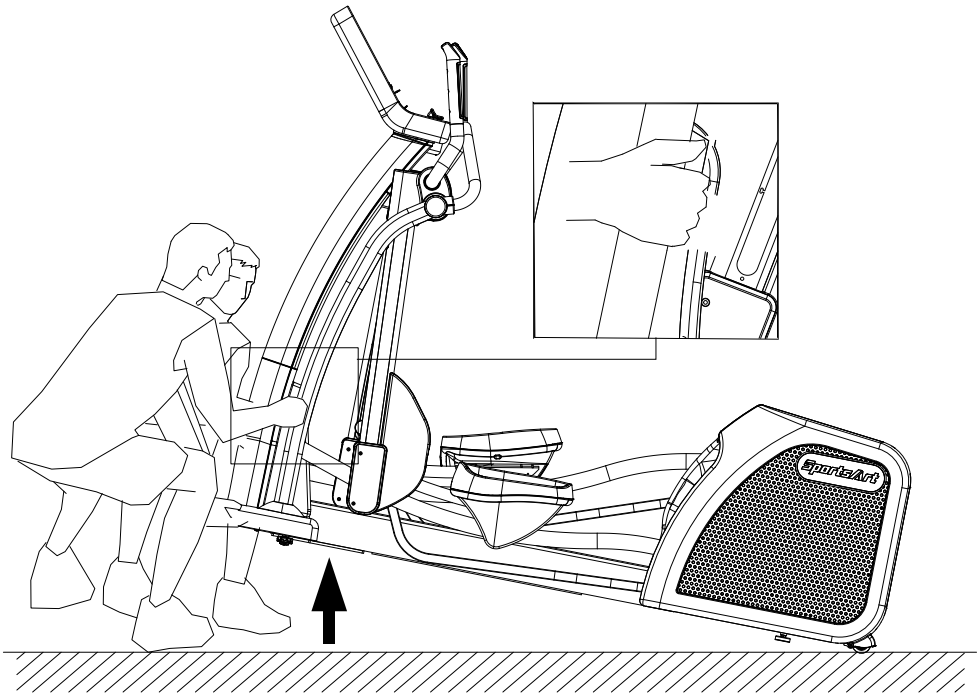

## STEP 9 Level the Product

For the user's safety and the proper functioning of the product, this elliptical trainer must sit level on a flat floor. If necessary, adjust the levelers by following instructions (a) through (c) below.

(a) Loosen the leveler nut.

(b) Rotate the leveler foot downward so it firmly touches the floor.

(c) To secure this position, secure the leveler nut upward against the product frame.

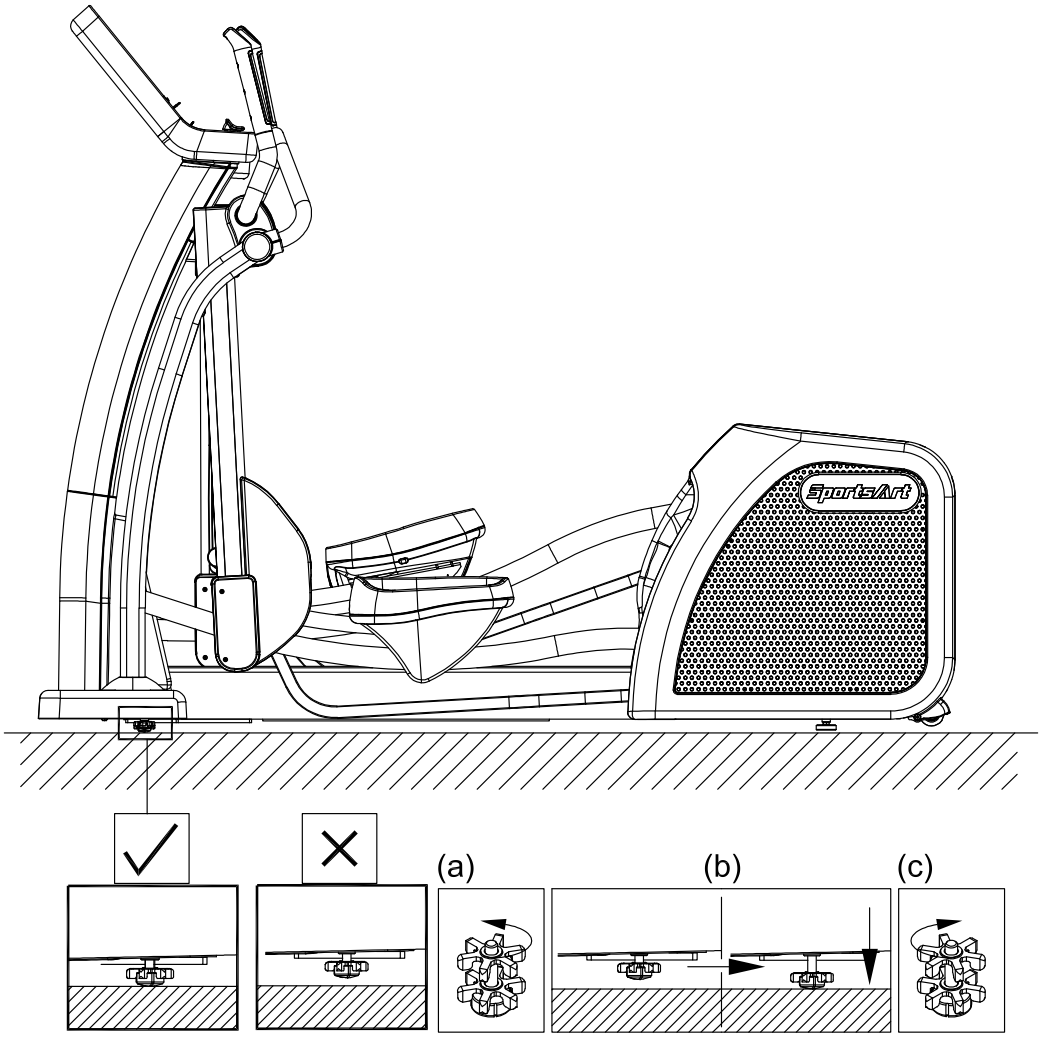

## STEP 10 Power Cord Assembly

(1) Please remove the pre-installed screws (33) from the machine prior to assembly.

(2) Push the plug cover of the power cord toward and against the plug.

(3) Plug in the power cord (A14) and secure it with the screws (33).

The picture below is for your reference.

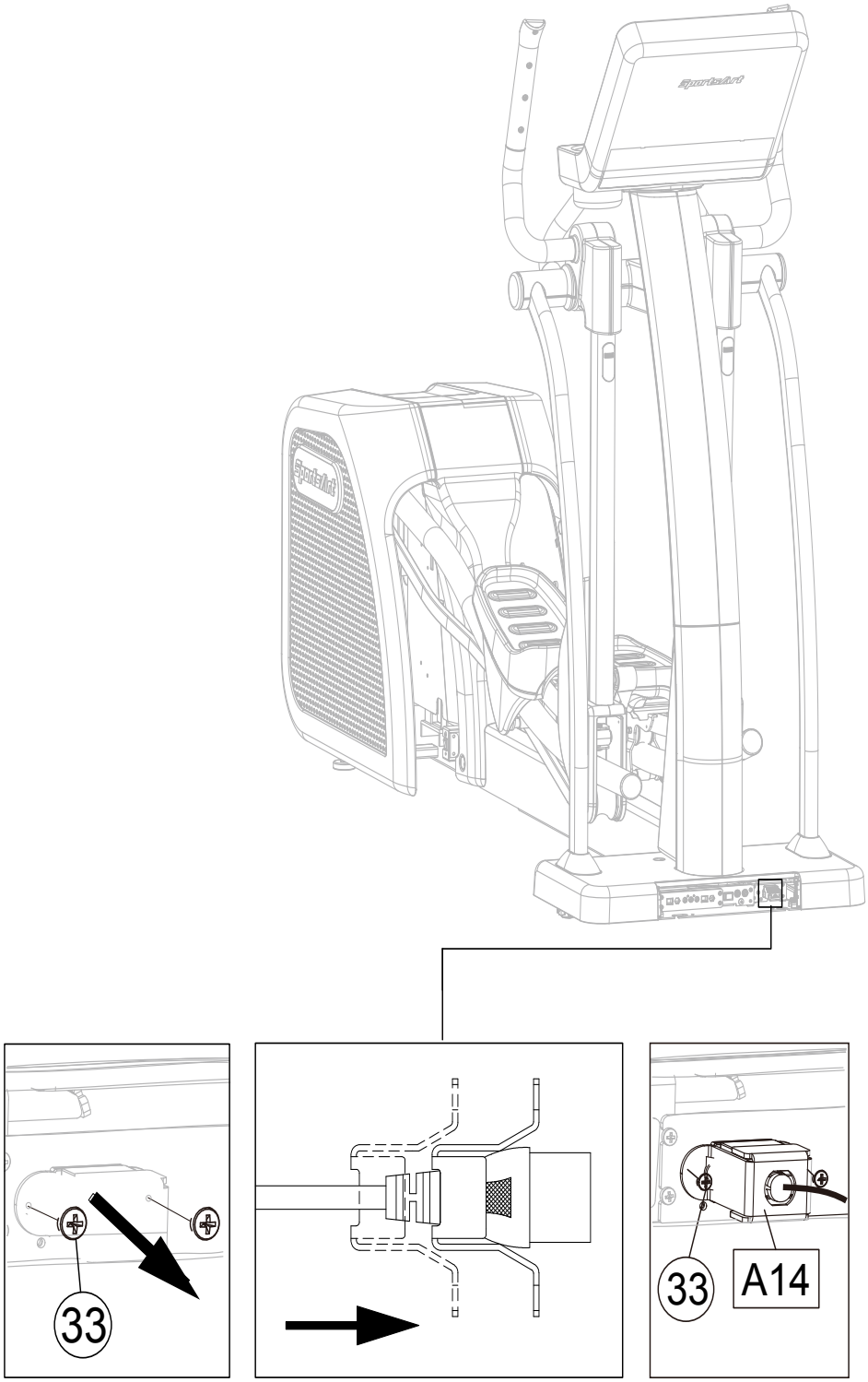

## STEP 11 Beware of Moving Parts

This product has moving parts that could be a danger to people and animals.

During use, do not put hands or other objects into the stride adjustment slot, the rear cover opening, or other areas in which such action might present a hazard.

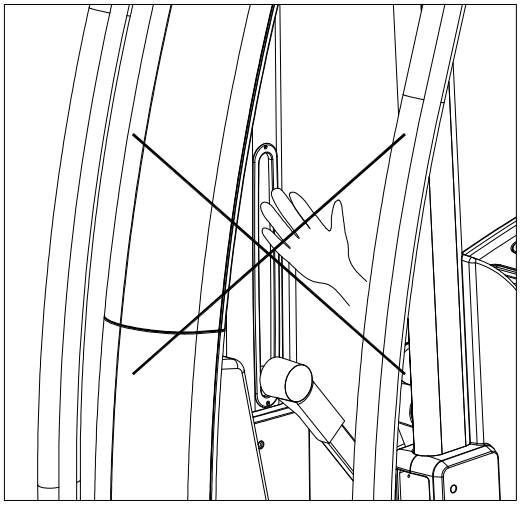

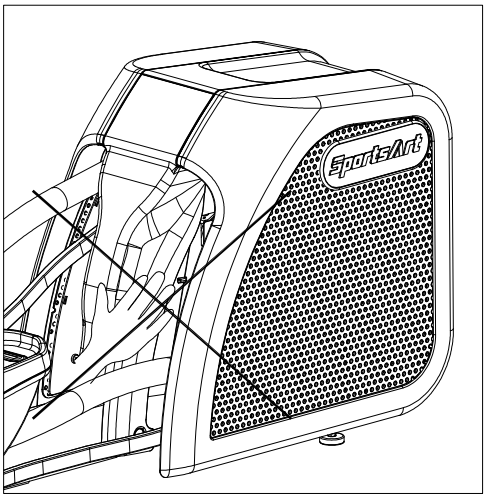

## STEP 12 Essential Functions Guide

LENGTH: Adjust the distance between two successive placements of the same foot.

RESISTANCE: Adjust the weight or force you need to place on the pedals to push them.

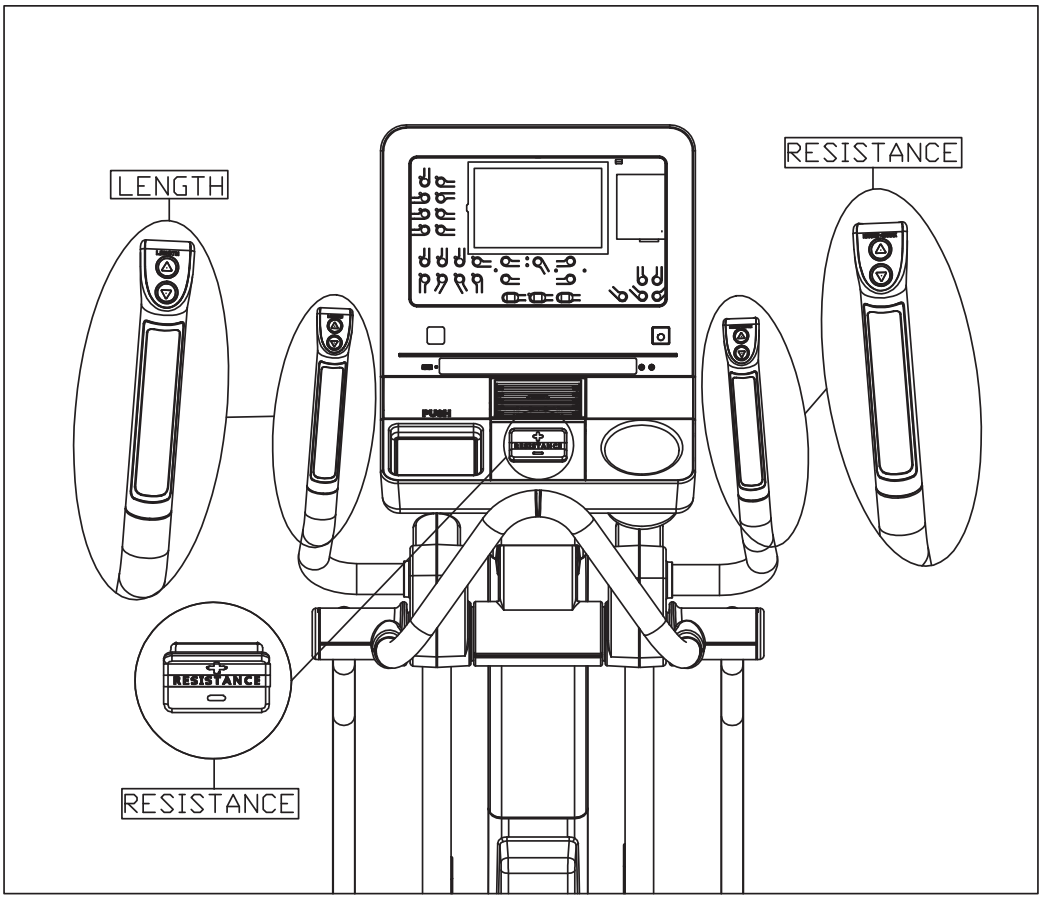

## STEP 13 Power Supply Protection(Circuit Breaker)

When current is overloaded, the Circuit Breaker will work to protect the machine from damage. In the following picture (a) you will find a round button (D), which is the device of circuit breaker, it will pop up when current is overloaded, please turn off the machine in this situation. After the maintenance personnel find and solve the problems, press the button as shown in picture (b), then restart the machine to get back to exercising.

The picture below is for your reference.

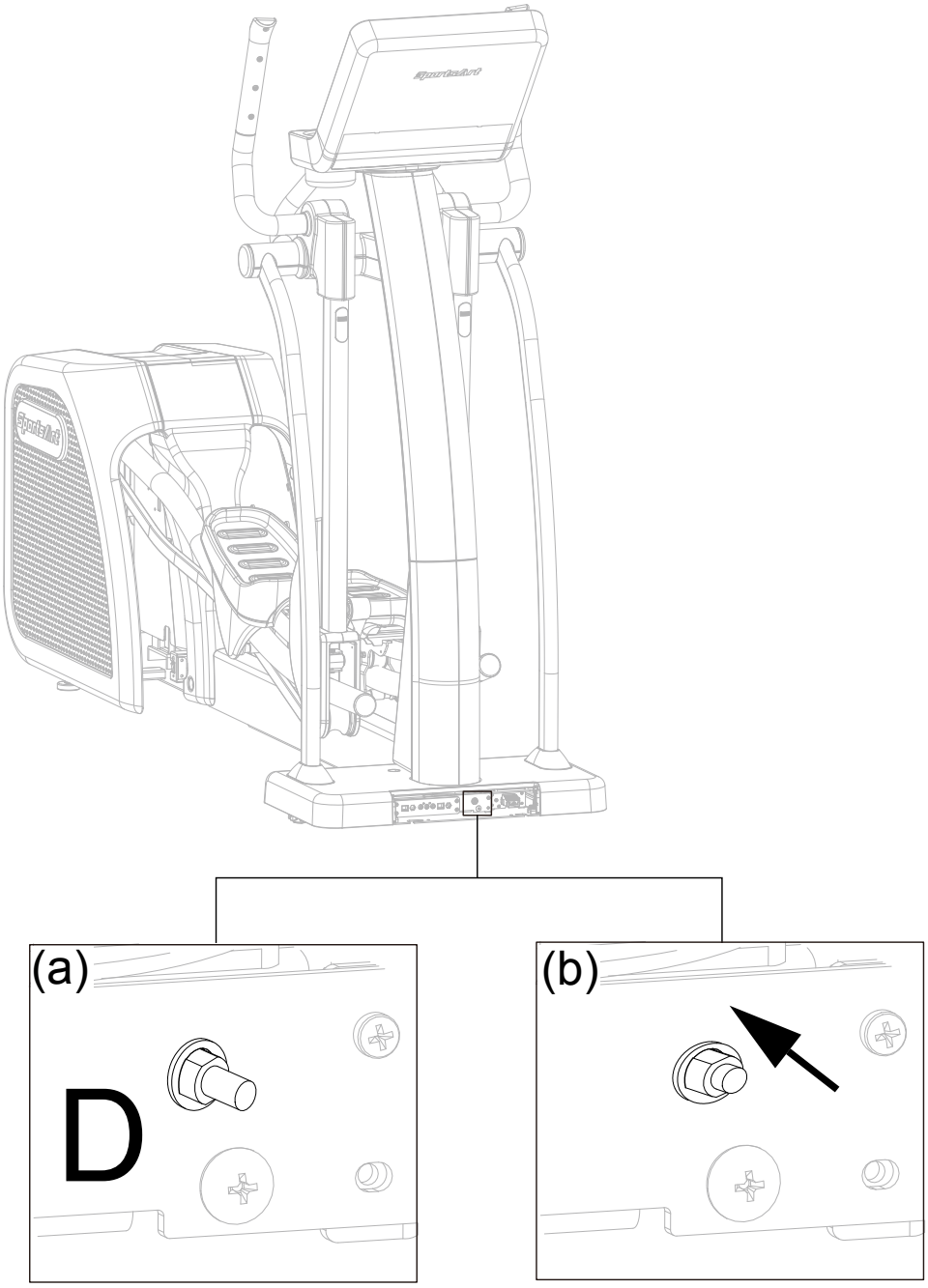

# 6. UNDERSTAND G876 LCD DISPLAY

## DISPLAY Overview

In this chapter, you will learn how to use and set up the console of your elliptical trainer. Please read the entire manual prior to using the elliptical trainer to get the best exercise efficiency and enjoy your workout.

## DISPLAY Console Panel

| No. | Title | Function |
|---|---|---|
| 1 | LCD Window | Display the data of “ RESISTANCE,TIME, DISTANCE, HEART RATE, CALORIES, Instant Watt To GRID ”. |
| 2 | GOAL Select Area | Options:<br>TIME, DISTANCE,CALORIES, Watt-hour To GRID.. |
| 3 | STRIDE▲/▼ | Press this key to change stride settings. Settings change by one value each time the key is pressed |
| 4 | PROGRAMS Select Area | MANUAL, INTERVAL, PLATEAU, RANDOM, VARI-STRIDE, FIT TEST, CUSTOM HR, WT LOSS CARDIO. |
| 5 | ENTER | After entering data, press <ENTER> to confirm. |
| 6 | QUICK START | Skip the program selection and setting to start training instantly. |

## DISPLAY Console Panel (Continued)

| No. | Title | Function |
|---|---|---|
| 7 | QR code and NFC tag | (1) Without the SA WELL+: Only link to SPORTSART website when scanning the QR CODE and NFC label.<br><br>(2) With the SA WELL+: Use the APP on your mobile scanning the QR CODE and NFC label to connect to the elliptical trainer to your personal exercise records. |
| 8 | USB Port | Used for software updates but can also be used as a charging port. |
| 9 | SA WELL+ Device | Data management(This function is only available if you purchase SA WELL+) |
| 10 | RESISTANCE+ - | Press <RESISTANCE +/-> to set the resistance. |
| 11 | Numeric Keypad | Press these keys to directly input numeric values. |
| 12 | CHANGE DISPLAY | Press this key to switch the message on the LCD display window. |
| 13 | Fan Speed Switching | Cycles thru 3 different fan speeds. |
| 14 | TV WIRELESS AUDIO RECEIVER Control Area | Change volume and TV audio channel (in conjunction with MYE option) |
| 15 | Wake Button | Press this key to wake-up the console panel. |
| 16 | Headphone Port | Plug in the headphone to hear the sound from the TV WIRELESS AUDIO RECEIVER. |
| 17 | STOP/PAUSE | Press this key to stop or pause the exercise; Hold the key to return to start screen. |

## DISPLAY Window Display

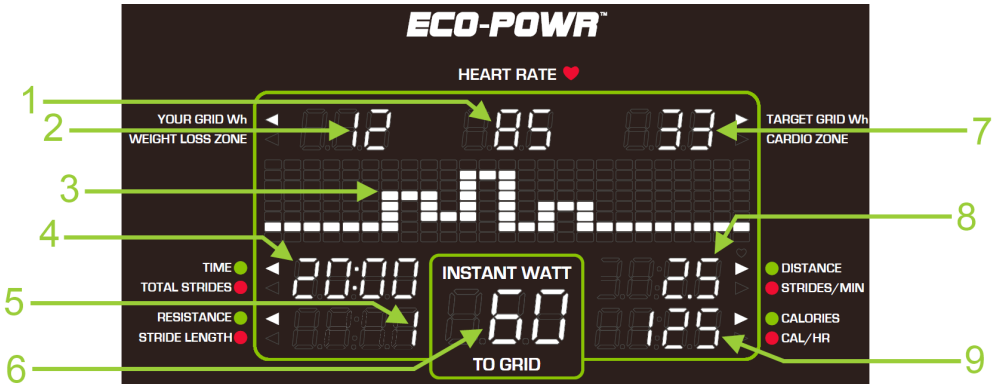


| No. | Function |
|---|---|
| 1 | Display the data of your heart rate value. (Displayed when BOTH HANDS hold on the sensor.) |
| 2 | YOUR GRID Wh : Display your current accumulated GRID Wh value.<br>WEIGHT LOSS ZONE : The WT LOSS 65% heart rate value. |
| 3 | Display the messages or the illustration. |
| 4 | TIME : Display the total time of the workout or the remaining time to exercise.<br>TOTAL STRIDES : Display your total strides. |
| 5 | RESISTANCE : Display your current resistance.<br>STRIDE LENGTH : Display your current stride length. |
| 6 | he Instant Watt to GRID during exercise. |
| 7 | TARGET GRID Wh : Display the target value of the Watt-hour To GRID that you have set.<br>CARDIO ZONE : The CARDIO 80% heart rate value. |
| 8 | DISTANCE : Display the total distance of the workout or the remaining distance to exercise.<br>STRIDES/MIN : Displays your current SPM. |
| 9 | CALORIES : Display the calories you have burned during the exercise.<br>CAL/HR : Display the calories that you have burned per hour. |

## DISPLAY Specifications

| Parameter | Spec. |
|---|---|
| RESISTANCE | 1-40 |
| STRIDE LENGTH | 17 - 29 inch (450 - 730mm) |
| CAL/HR | 0-9999 K-CAL |
| TIME | 0:00-99:59 , 100-9999 |
| DISTANCE | 0.00-9999 Mile/KM<br>(display maximum of 2 decimal places) |
| CALORIES | 0-9999 K-CAL |
| SPM | 5-150 |
| HEART RATE | 35-255 bpm |
| Instant Watt To GRID | 0-270 Watts |
| YOUR GRID Wh | 0.00-9999 Wh |
| TARGET GRID Wh | 5-100 Wh |

# 7. OPERATE THE PRODUCT

## OPERATION Safe Operating Area

(a) Safety clearance required as shown below. Do not allow people to be near this area when operating.

(b) Noise emission under load is higher than without load.

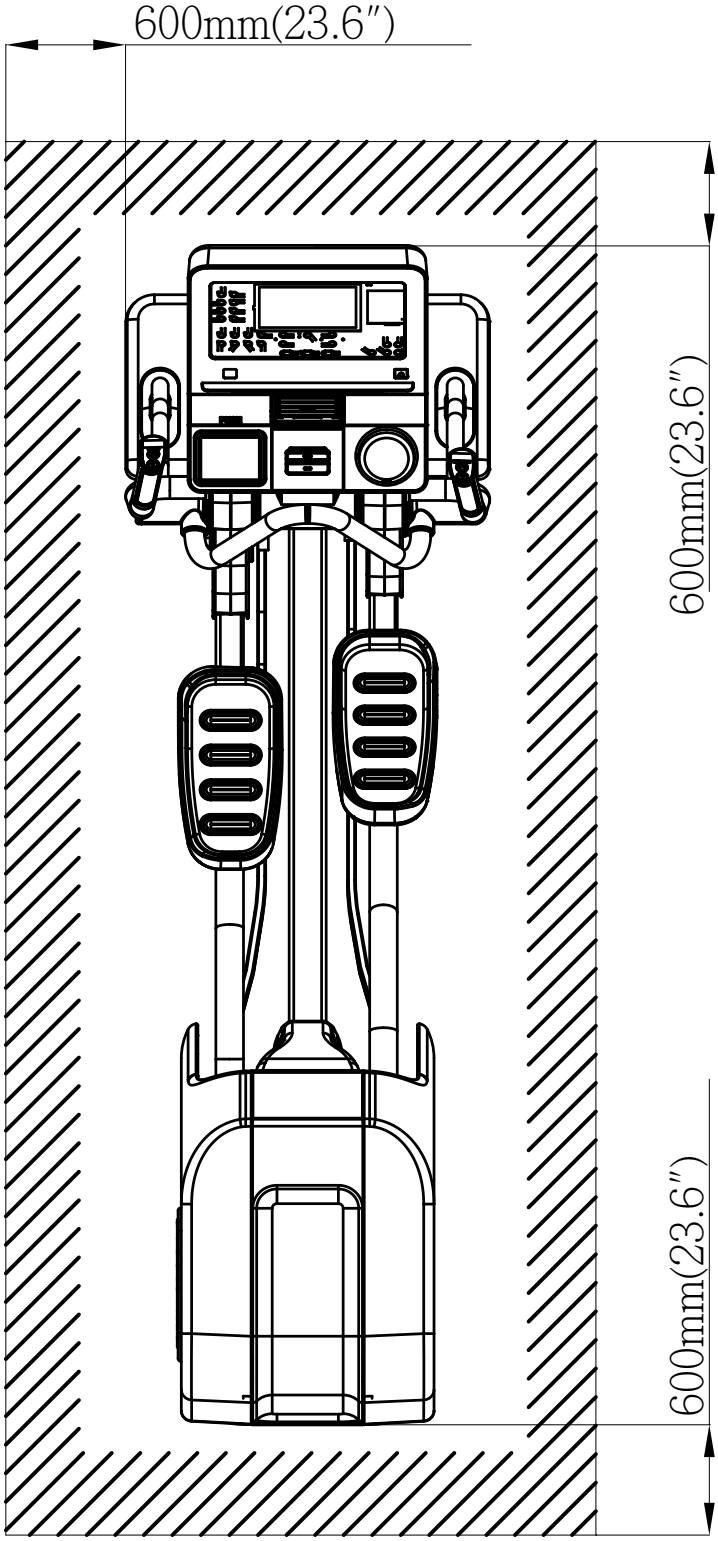

## OPERATION Safely Get On/Off

(a) Place your feet on floor and then hold the handles to steady self while stepping on the pedals as shown below.

(b) Wait until pedals come to a complete stop and then hold onto handles for stability while carefully stepping off the elliptical.

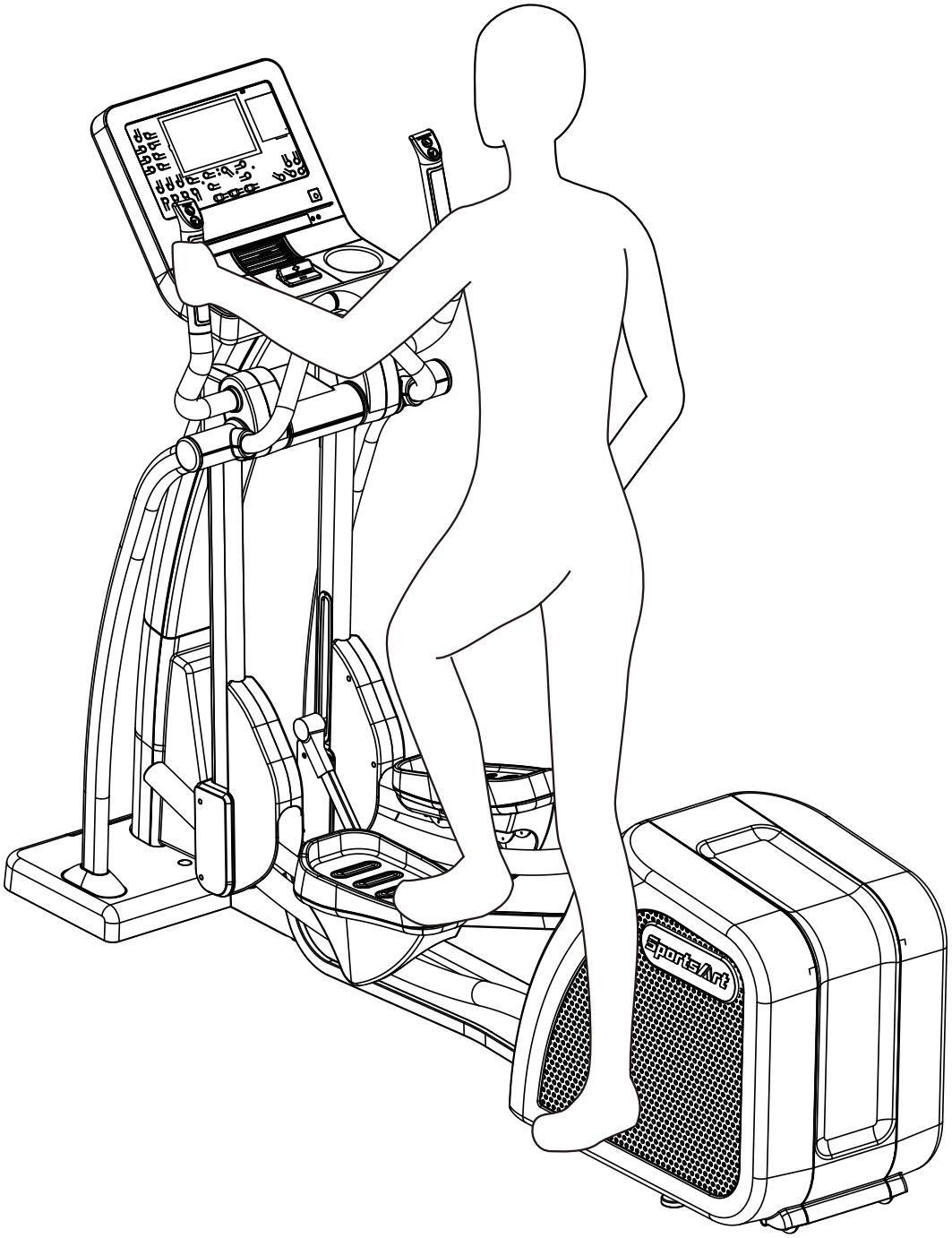

## OPERATION Proper Workout Position

(a) Proper workout position for user is shown below.

(b) Over exercising or improper workout form may result in serious injury.

(c) User can hold onto handles for stability when getting on or getting off from the right/left side of the elliptical.

(d) This product is intended for exercise arms and legs.

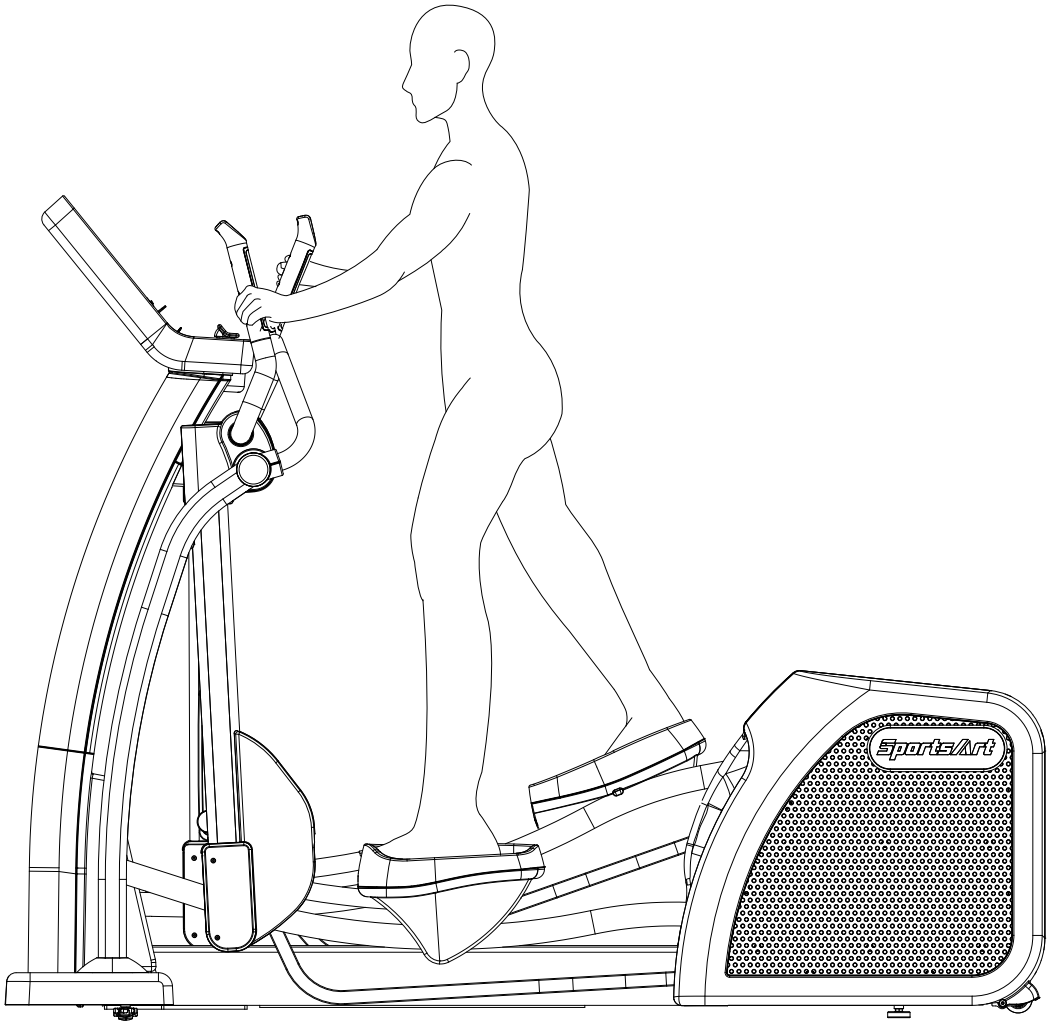

## OPERATION Start Screen

Press the wake button (at the bottom right of the panel) or step on the pedal to start the machine. After started, you will hear the BEEP sound and see the start screen.

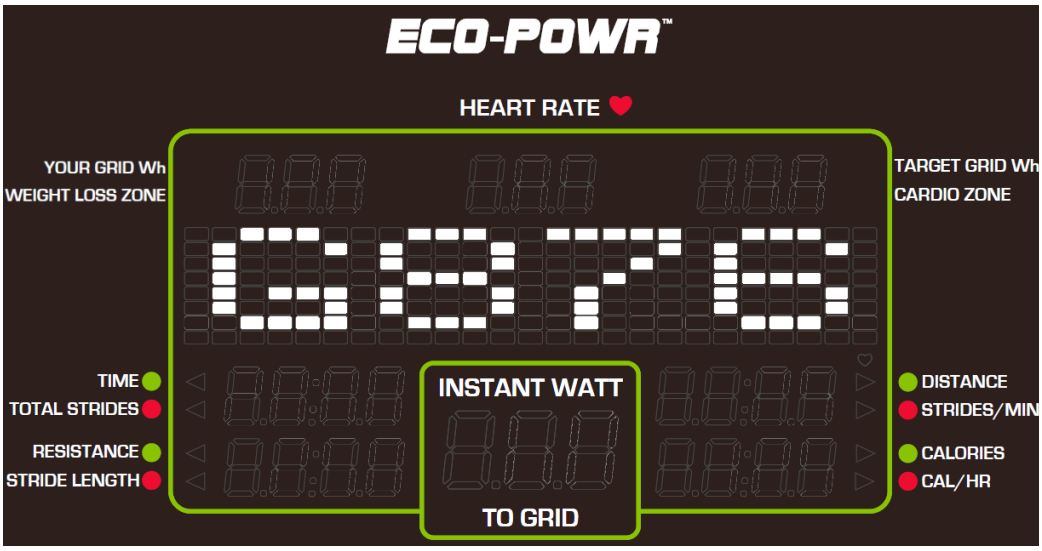


## OPERATION Quick Start

QUICK START key is preset based on user 35 years old and weighs 75 kilograms (165 pounds). The program is preset at manual, and the resistance is preset at 1.

## OPERATION User Setting Procedure

The elliptical trainer measures your calories burned (based on weight), target heart rate (based on age), total time, and total distance based on your personal information that you have entered.

1. PROGRAM/GOAL Setting

(1) Select your desired program from PROGRAM menu and press <ENTER>, and then proceed to workout goal setting.

(2) Select your target goal from GOAL menu and press <ENTER>, and then proceed to set the goal values. (The program is preset at MANUAL)

2. WORKOUT GOAL Setting

After entered goal-setting, the words “SELECT GOAL” will pop up on the display. Select one of the following options to set as your target goal.

| Pattern | Instruction |
|---|---|
| TIME | Select <TIME> as your workout goal, the <TIME> button light will stay on and then proceed to time settings.<br>The range is 5 - 300 minutes with the default of 30 minutes. |
| DISTANCE | Select <DISTANCE> as your workout goal, the <DISTANCE> button light will stay on and then proceed to distance settings. The range is 0.1 - 99.9 miles/kilometers with the default of 2.0 miles(3.0 kilometers). |
| CALORIES | Select <CALORIES> as your workout goal, the <CALORIES> button light will stay on and then proceed to calories settings. The range is 100 - 9999 kCal with the default of 100 kCal. |
| Watt-hour TO GRID | Press <WATT-HOUR TO GRID> and select the “Power Generation” as your goal. When the “WATT HOUR TO GRID” light is on, you are led to set the target power generation.<br>The range is 5-100Wh with the default of 20Wh. |

3. Age and Weight Setting

(1) AGE : The range is 10 - 99 years old with the default of 35 years old.

a. Window Display:

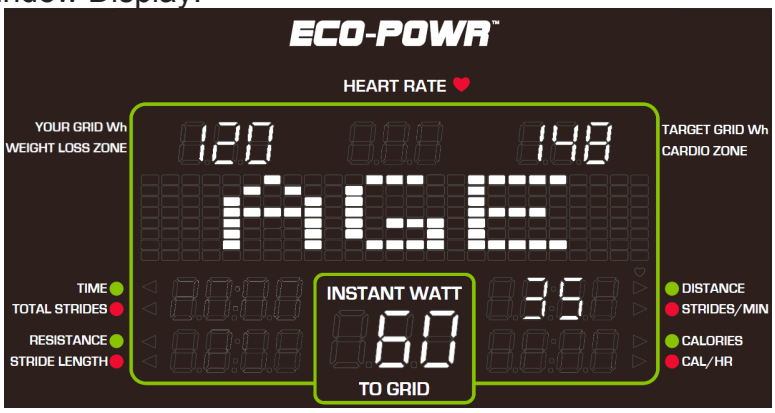


b. Press ＜RESISTANCE +/-＞ or number ＜0－9＞ to set your age.

c. Press ＜ENTER＞to confirm and proceed to the weight settings.

d. You can also press ＜QUICK START＞ to start exercise directly with the preset workout values or the system default.

## OPERATION User Setting Procedure (Continued)

(2) WEIGHT : The range is 50-500 lb. (20-227 kg) with the default of 165lb. / 75 kg.

a. Workout Data Display:

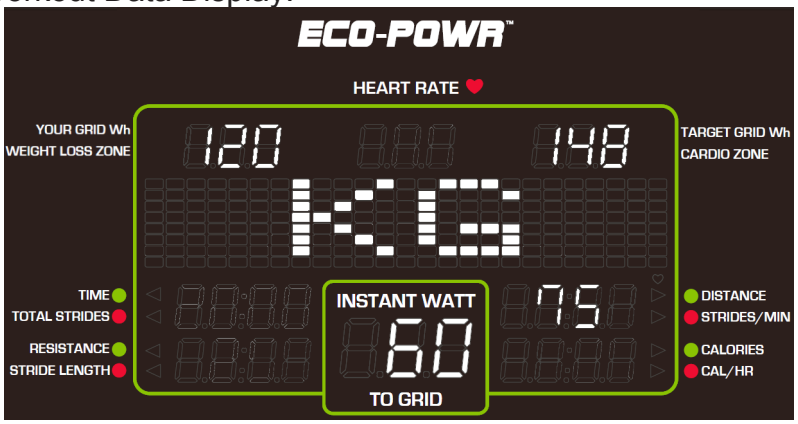


b. Press ＜RESISTANCE +/-＞ or number ＜0－9＞ to set your weight.

c. Press ＜ENTER＞to confirm and enter PROGRAM settings.

d. You can also press ＜QUICK START＞ to start exercise directly with the preset workout values or the system default.

## OPERATION Workout Programs

You can choose the desired program from the PROGRAM menu located at the bottom left corner of the display.

**MANUAL:**

The general mode. The resistance can be adjusted according to your own preference.

**INTERVAL:**

Regularly alternate between high-intensity and low-intensity exercises.

(1) The program is a two-stage exercise (REST/WORK) and each has different parameters of the time and the resistance. According to the time ratio, there are three options in 1:1、1:2 and 2:2.
(For example: “1 : 2” means one minute for resting and 2 minutes for workout.)

(2) Since it is a two-stage training, you can change the REST resistance and memorize it when the program is executed, same as for WORK. Next time, when work to the corresponding segment, it will operate according to the last setting.

**PLATEAU:**
This program is to simulate to workout on the plateau, the change in resistance is shown in the picture below. The first and the last segment each accounts for 20% of the workout. The middle segment accounts for 60% of the workout.

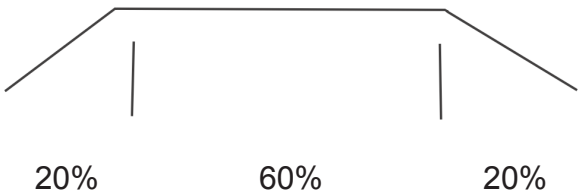


**RANDOM:**
The graphic pattern in RANDOM PROGRAM are generated randomly, and the illustration shows differently each time.

**VARI-STRIDE:**
In this program, stride length changes automatically during a 20-minute, 30-minute, or 40-minute workout session. There are three programs: VARI-STRIDE 20; VARI-STRIDE 30; VARI-STRIDE 40.
Each time the VARI-STRIDE key is pressed, one of the three programs will appear. Press ENTER to select the desired program.
After selection, press ▲/▼ keys to set your maximum stride length when display shows “MAX STRIDE - XXX”. Range is 25 - 29 inch (630 - 730mm), with a default setting of 25 inch (630mm). Then press the ENTER key to confirm your choice.
During program setting, you may press QUICK START to start the program right away. The maximum stride length can be adjusted during exercising by pressing STRIDE ▲/▼ keys.

**FIT TEST:**
The FIT TEST program is designed for physical fitness assessments. The program is set with a time limit; therefore it is not restricted by the program time limit setting at the engineering mode.
After you press the FIT TEST key, the display will show “STARTING TEST” to begin this program. The test is divided into 4 segments of 3 minutes; it will compare the actual Watts and the preset Watts in each segment and adjust the resistance accordingly.
During the test, the Red dot in the dot matrix window represents the target SPM and the orange dot represents the actual SPM. You want to match the actual SPM to the targeted value. The best SPM range during test is between 40SPM to 70SPM with targeted 50SPM. If the actual SPM is below 40SPM for more than 5 seconds, the display will ask you to “SPEED UP” and if it is above 70SPM for more than 5 seconds, it will ask you to “SPEED DOWN”.

## OPERATION Workout Programs (Continued)

Following conditions occurs will end this test program:
1. STOP key is pressed. 2. Program time ends.
3. Actual Heart Rate is > (220-Age) x 0.8 for more than 15 seconds.
4. No heart rate detected for more than 30 seconds.
5. The speed is slower than 60SPM or faster than 90SPM for more than 5 seconds.

The message will display “END OF FIT TEST” and “YOUR SCORE - XXX”. (The max score is 100 and min is 0)

**CUSTOM HR / WT LOSS / CARDIO:**
The programs take control of resistance, keeping your heart rate within the target zone.

(1) The target heart rate for each program is set as follows:
   a. The user determine his/her target heart rate. The calculation does not take into account of his/her age.
   b. In this program, the resistance changes automatically to maintain the target heart rate that is calculated by the formula (220-AGE) * 0.65.
   c. In this program, the resistance changes automatically to maintain the target heart rate that is calculated by the formula(220-AGE) *0.80.

(2) If you choose CUSTOM HR, the target heart rate value will need to be set first. The range is 84-200 bpm with the default of 120 bpm.

(3) During exercise, if the machine cannot read your heartbeat signal, it will display ” NO HEART RATE READING , PLEASE CHECK TRANSMITTER” on your screen, and the resistance can be only adjusted manually.

(4) Resistance will start at level 1, and the default is 50 SPM, your actual heartbeat is detected at all times.

(5) During exercise, if the SPM is 5 revolutions below the recommended step rate for 25 seconds, the window will show the message “SPEED UP”, please speed up your steps to return to the previous screen.

## OPERATION During Exercise

During exercise, you can switch to a different program using the same WORKOUT GOAL(TIME/DISTANCE/CALORIES/Watt-hour To GRID) by pressing a different program key.
Please note it is not allowed to switch directly in the situation as below, and the window will display the message ” SWITCHING NOT ALLOWED”.
(1) During MANUAL、INTERVAL、PLATEAU、RANDOM、VARI-STRIDE、CUSTOM HR、WT LOSS、CARDIO program, it cannot be switched to FIT TEST program.
(2) It is not allowed to switch to other programs during FIT TEST program.

## OPERATION Cool Down

Once the goal(TIME、DISTANCE、CALORIES、WATT-HOUR TO GRID) has been achieved, it will show the message" COOL DOWN " on your screen. The machine will enter a two-minute cool down period and count down from 2:00 to 0:00.

## OPERATION Stop and Pause Exercise

(1) During exercise, press <STOP/PAUSE> to pause the work, all the training data will stop accumulating and keep the current value, and the window will show the message "PAUSED" and "PRESS QUICK START TO RESUME" in cycles.

(2) Without any movements for 20 seconds while paused, the window will return to start screen. You can press <QUICK/START> to go back on your exercise or press <STOP/PAUSE> to display your training accumulated value.

## OPERATION Workout Summary

Press ＜STOP/PAUSE＞ or after cool down , it will show the message "REVIEW SUMMARY" and your current workout status on the screen lasting for 15 seconds, then press ＜STOP/PAUSE＞ once again to return to start screen.

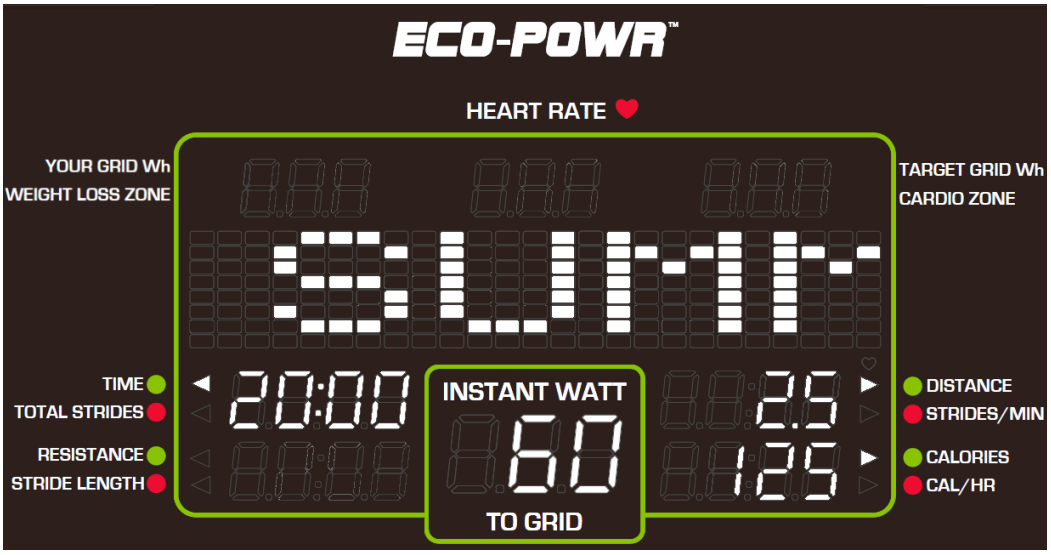

## OPERATION Idle Mode

The machine will turn into power saving mode when there is no stepping on the pedal or not been operated to the buttons for 30 seconds, and the window will display “- - - -“ and continue to flash. To restart the machine, please step on the pedal or press any button to return to start screen.

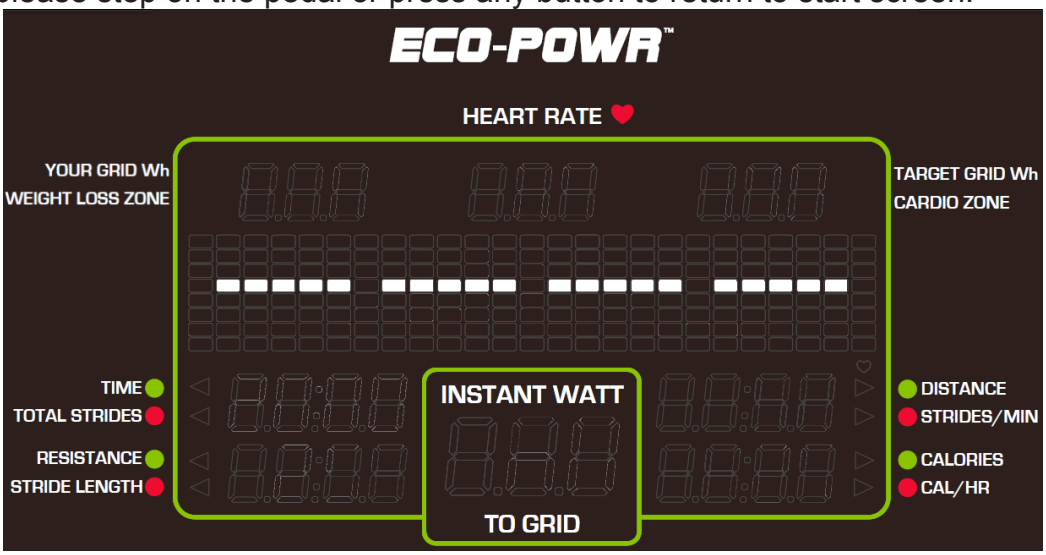


## OPERATION Energy Smart Function

The machine will shut off automatically when there is no stepping on the pedal or not been operated to the buttons for 2 minutes.

## OPERATION User Parameter Setting

Hold the <Change display > for 3 seconds to enter the user parameter setting procedures; press the <STOP> key at any time to return to the start screen.

Please refer to the following setting procedures:

**(1) Metric System / Imperial Units Setting**

The window will display KPH or MPH, press <RESISTANCE＋/－> or <STRIDE▲/▼> to select the metric system or the imperial units, then press <ENTER > key to confirm your setting and go to the next step.

**(2) Display the Program Version**

The window will show the version of each program, press <RESISTANCE＋/－> or <STRIDE▲/▼>to view each program version, then press <ENTER > and go to the next step.

Program Version Items:

(a) CTL SA_6 - xx → The program version of the control board.

(b) DRV MI - xx - yyyy→ The program version of the Micro Inverter drive board.

(c) SA WELL+ x.x.x → The program version of the SA WELL+ adapter. (This function is only available if you purchase SA WELL+.)

**(3) Display the Mileage**

The window will show the message of DIST- xxxxxx KM or DIST- xxxxxx MILE, press <ENTER > and go to the next step.

**(4) Display the Total Time**

The window will show the message “TIME- xxxxxx HOURS”, press <ENTER > and go to the next step.

**(5) Display the Total Watts**

The window will show the message of “WATTS- xxxxxx KWH”, press <ENTER> and go to the next step.

**(6) Product Serial Number**

The Window will show the message of “S/N xxxxxxxx” (as shown below), press <ENTER > and go to the next step.

※ The number “1234567” in the picture represents the machine serial number.

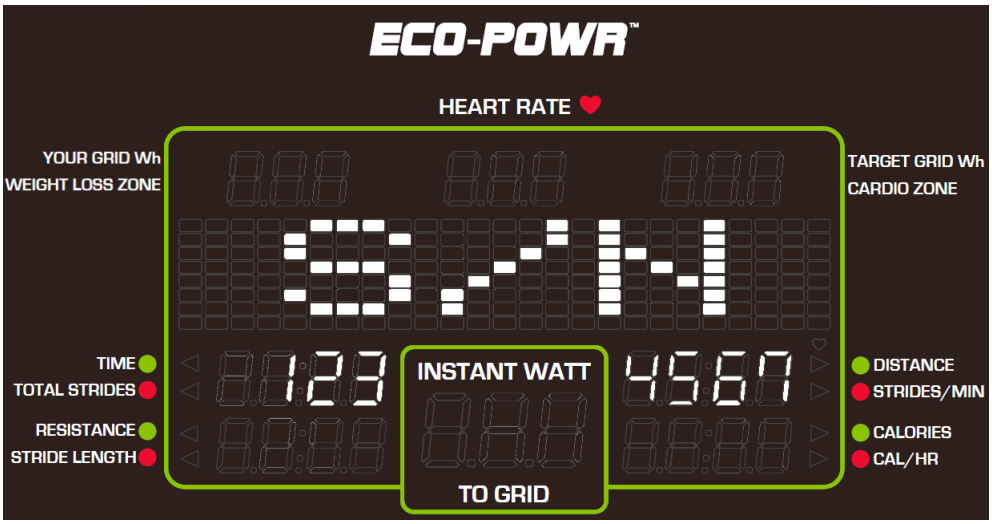


**(7) Language Setting**

The window will show the options of the coutries, press ＜RESISTANCE +/-＞ key to select your language, then press <ENTER > to confirm and go to the next step.

**(8) Time Limit Setting**

The window will show the message of “LIMIT”, press ＜RESISTANCE +/-＞ key or numeric keypad to set the time, then press <ENTER > to confirm and go to the next step.

If the time limit is set less than 5 minutes, this function is deactivated. The setting range is 5-60 minutes.

**(9) PAUSE LIMIT Setting**

The window will show the message of “PAUSE LIMIT”, press <RESISTANC+or-> or numeric keypad to set the time, press <ENTER > to confirm and go to the next step. The range is 2-60 minutes.

**(10) Turn on/off the Buzzer**

The window will show the message of “BZ”, press ＜RESISTANCE +/-＞ key to turn on/off the buzzer, press <ENTER > to confirm and go back to the start screen.

# 8. ABOUT HEART RATE DETECTION

Heart rate detection functions are selected at the time of purchase. Not every product has every type of heart rate detection. The following explains factors that influence the performance of two of the most common types of heart rate detection devices.

## HEART RATE Telemetry

The words “telemetry heart rate” refer to the detection of heart rate via a device worn on the exerciser and transmitted over the air to a circuit board built into the product. Telemetry heart rate devices are commonly worn on the exerciser’s chest, where the pulse is strongest and relatively easy to detect.

The following explains conditions that affect the performance of the telemetry heart rate function in all products.

- The telemetry heart rate transmitter emits a wireless 5 kHz signal that is harmless to the human body. Keep a distance within 60cm between the heart rate receptor and the transmitter to achieve stable connection.
- If the battery is too low, the receiving distance may be shortened or there will be no reception.
- Secure the telemetry heart rate transmitter on your chest so that it stays in place without making you feel uncomfortable. Moisten the skin for better contact.
- Because the telemetry heart rate signal varies in strength from 20 Hz to 20 KHz, environmental interference can block signal reception. Physical vibration and electronic devices, including stereos, TVs, and even fluorescent lights, can interfere with signal reception. For best results, install the product in an area free from such interference.
- Space the product apart by at least 39 inches (100 cm) to avoid having the heart rate value from one exerciser appear on a neighboring product.

## HEART RATE Contact

The words “contact heart rate” refer to the detection of the heart rate via sensors on the product. By holding the sensors, the exerciser can view his or her heart rate on the product display. Like telemetry heart rate, contact heart rate can be influenced by several factors. The following list includes some of these factors.

- A weak pulse makes it difficult to detect heart rate.
- Low systolic blood pressure makes it difficult to detect heart rate.
- Dry, course palms impede heart rate detection. For best results, moisten your palms. But do not apply hand lotion immediately prior to your workout, because hand lotion can gum up the contact pads.

Heart rate devices built into this product are not medical devices. Heart rate values are for reference only. Do not use them for medical diagnostic or treatment work.

CAUTION: Heart rate detection and transmission devices have been known to interfere with the operation of pacemakers, possibly endangering human life. If you have a pacemaker, exercise under your doctor’s supervision; take a test to ensure your safety during the simultaneous use of the pacemaker and heart rate detection devices. The use of such devices must be undertaken at your own risk.
Note that in dry areas in particular, static electricity can interfere with unit operation and shock people. To discharge static electricity from your body, touch something else before touching metal on the product.

# 9. GUIDELINES FOR EXERCISE

## HOW HARD SHOULD I EXERCISE?

Studies show that to benefit from aerobic exercise, people need to maintain a certain heart rate during their workouts. Your heart rate training zone depends on your age and fitness level.

The darkened area in the chart to the right represents the recommended heart rate training zone for people of various ages. It was calculated by taking 220 minus age in years, multiplied by 65% and 80%. The area between those values is the heart rate training zone.

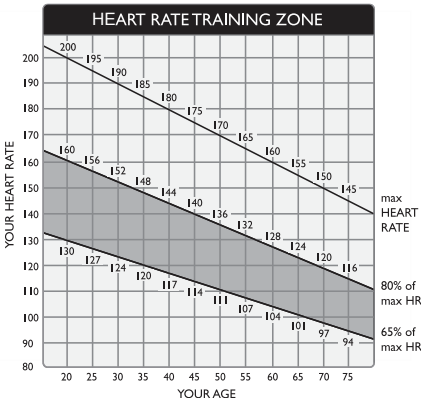


CAUTION: Heart rate training zones are generalizations and may not suit every person. Always check with your physician to understand what heart rate goal would be appropriate for you.

## HOW LONG SHOULD I EXERCISE?

The duration of your workout must depend on your fitness level. In general, it is recommended that you maintain a heart rate within your training zone for at least 15 to 20 minutes to experience the benefits of aerobic exercise. Beginners should always start out slowly and gradually increase the duration and intensity of their workouts. As your fitness level improves, you will be able to maintain a heart rate within the training zone for longer periods of time.

When you begin your workout, use the first several minutes to warm up. Then slowly increase the intensity of your workout to bring your heart rate into your training zone. At the end of your workout, gradually decrease your workload. Then exercise lightly to cool down.

## HOW OFTEN SHOULD I EXERCISE?

Research indicates that to achieve the greatest benefit, people should exercise three to five times per week. It is important to allow sufficient time, at least 24 hours, for your body to recover after exercise.

# 10. MICRO INVERTER MI-250

## MICRO INVERTER Important Safety Instructions

**CAUTION**
These servicing instructions are for use by qualified personnel only. To reduce the risk of electric shock, do not perform any servicing other than that specified in the operating instructions unless you are qualified to do so.

**PRUDENCE!**
Ces instructions d'entretien sont uniquement destinées à un personnel qualifié. Pour réduire le risque de choc électrique, ne pas effectuer un autre service que celui spécifié dans les instructions de fonctionnement, à moins que vous soyez qualifié pour le faire.

To lower the risks involved in the assembly and operation of this inverter, please carefully note the meaning of the following warning symbols, abide by their messages, and thoroughly read these instructions.

This WARNING symbol indicates a risk of electric shock. Please use extreme caution when processing the procedure.

This CAUTION symbol identifies an improper operation that could result in critical safety issue or damage to the user or devices.

## MICRO INVERTER Cautionary Messages

To lower the risks involved in the assembly and operation of this inverter, please follow the intent of these messages.

**CAUTION**
Plates are live. Disconnect unit before servicing. No user serviceable parts inside. Refer servicing to qualified service personnel.

**ATTENTION!**
Les plaques sont à nu. Débrancher l'appareil avant son entretien. Aucune pièce n'est rèparable par l'utilisateur. Faire appel à un réparateur qualifié pour toute intervention de dépannage.

**WARNING**

Power fed from more than one source. Each circuit must be individually disconnected before servicing. Do not remove cover until 5 minute after disconnecting all sources of supply.

**AVERTISSEMENT!**

L'alimentation provient de plus d'une śource. Chaque circuit doit étre coupé avant toute intervention de dépannage. Attendre 5 minutes avant de retirer le couvercle une fois toutes les sources d'alimentation coupées.

**CAUTION**

Perform all electrical installations in accordance with all applicable local electrical codes and the National Electrical Code (NEC), ANSI/NFPA 70.

**PRUDENCE!**

Effectuer toutes les installations électriques en conformité avec les règlements locaux en vigueur et du Code National de l'Electricité (NEC), ANSI/NFPA 70.

## MICRO INVERTER Electronic Specifications

| | |
|---|---|
| Input Data(3 Phase AC) | |
| Input power source | 3 Phase permanent-magnet generator |
| Maximum input voltage | 140V(line-to-line voltage) |
| Nominal operating voltage range | 55-125V(line-to-line voltage) |
| Maximum input current | 7A(line current) |
| Output Data(single phase AC) | |
| Maximum continuous output power | 220W |
| Output power factor rating | >0.9 |
| Nominal voltage(Operating range) | 120VAC(105.6-132.0V) (for USA)<br>230VAC(184.1-264.4V) (for EU) |
| Maximum continuous output current | 2.0A(for 120V) (for USA)<br>1.3A(for 230V) (for EU) |
| Normal output frequency(Operating frequency range) | 60Hz(59.3~60.5Hz) (for USA)<br>50Hz(47.4~50.1Hz) (for EU) |
| Utility interconnection voltage and Frequency trip limits and trip times | 0.16s (for USA)<br>0.2s(for EU) |
| Maximum units per branch | 7 (for USA, 15A branch system)<br>9 (for EU, 10A branch system) |
| Output controlling method | The LEVEL command of panel controller |
| Others | |
| Normal operation temperature range | +5˚C~+35˚C |
| Storage temperature range | +5˚C~+40˚C |
| Enclosure Rating | Type 1:”indoor use only” |
| Application | For SportsArt device only |

## MICRO INVERTER Circuit Board & Product Settings

**Frequency setting:**

MI-250 can detect the frequency automatically without setting.

**Connecting to grid power:**

After MI-250 is installed into Eco-Powr products, the power can be linked to grid power through product power cord, as shown in the following figure. Attention: it is necessary to cover the power cord and product connecting area with a metal cover. Turn the product power switch to OFF and unplug the power cord from the wall outlet before pulling the plug from the product. If the plug is pulled while it is connecting to the power grid, it might cause the electric arc and damage the plug

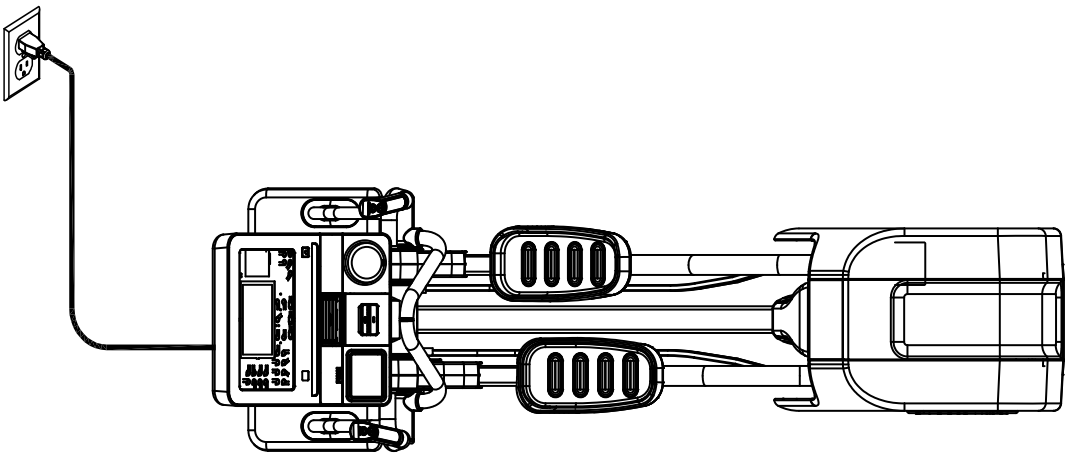

**The number of products can be linked to a power circuit line:**

The max wattage output of MI-250 is 250W. Pay attention to the electricity capacity limit (the rating of over-current protective device) to avoid overload. Different area voltage limits are shown as the following table.

| Local Grid voltage | The rating of the circuit | Number of products |
|---|---|---|
| 230V | 10A | 9 |
| 220V | 10A | 8 |
| 120V | 15A | 7 |
| 110V | 15A | 6 |

## MICRO INVERTER Circuit Board & Product Settings (Cont.)

This optional accessory SportsArt Eco-Powr Daisy Chain unit connection cord is suitable SportsArt Eco-Powr Daisy Chain cable unit connection cable allows multiple Eco-Powr products to be powered from a single electrical socket.

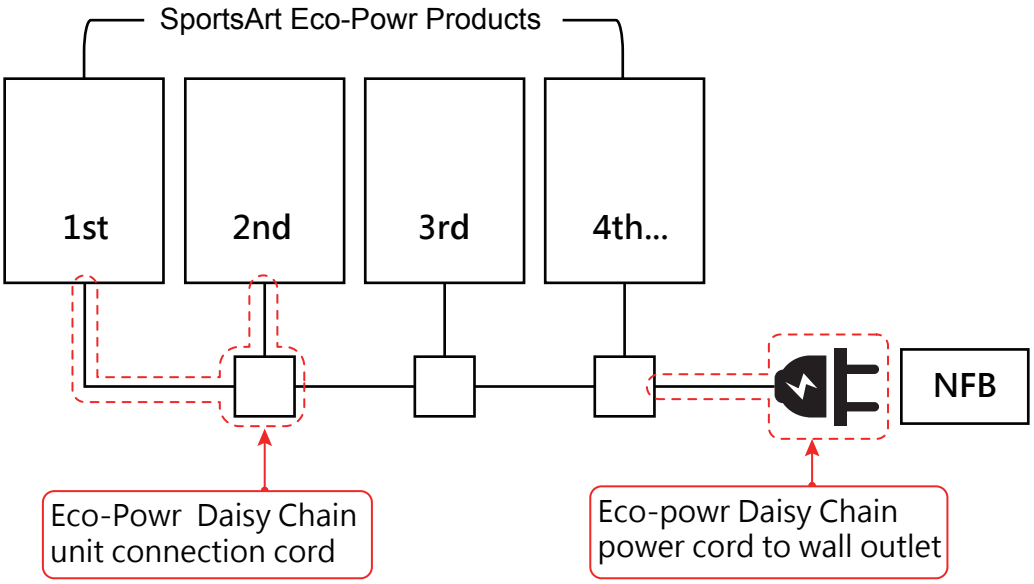


**Power on:**

Start pedaling the elliptical trainer with 40SPM or above for more than 6 seconds to turn on the unit. Start operating the elliptical trainer when the display enter Banner page. If the elliptical trainer cannot be turned on or the display turns dark or shows ”PLUG IN SOCKET”. Insert the power cord into the power supply socket and start pedaling the elliptical trainer.

When the elliptical trainer is stop pedaling and no other activity for 2 minutes, the elliptical trainer will shut down. Start pedaling the elliptical trainer to restart the unit.

# 11. MAINTENANCE

This section covers maintenance topics, including instructions on replacing a fuse and lubricating the walk belt, along with the presentation of a maintenance schedule, maintenance task list, one-year maintenance log, and electronics block diagram.

## MAINTENANCE Safety Precautions

- Please follow standard safety precautions when servicing on this product.
- Electronic components can carry an electrical charge even after the product has been turned off. For safety, turn off unit power. Wait five minutes to allow capacitors to discharge. Then disconnect the power cord from the wall socket (if applicable.) Only after such steps have been completed should covers be removed and electronic components accessed.
- Unplug product and wait ten minutes before performing maintenance.
- Do NOT use a damp towel to clean the product and do perform the following maintenances.
- Do NOT use cleaners with alcohol, ammonia, or other damaging chemicals. The use of such chemicals can damage the product and void the warranty. Never spray or pour any liquid directly onto the product. Doing so can damage electronic components and void the warranty.
- Use a clean, lint-free towel, dampened with a mixture of Simple Green® all-purpose cleaner, to thoroughly clean the handlebar and the console.
- This product has moving parts that can be hazardous. Exercise caution when maintaining, operating, or moving this product.
- Do not use accessories or parts that are not specifically recommended by the manufacturer (SportsArt) . Such parts might cause injuries or cause the unit to fail and void the warranty. We will not be responsible for any safety issue that arises due to the misuse of accessories or parts. At the same time, we will terminate the warranty terms of this equipment.
- The unit shall be disconnected from its power source during service and when replacing parts.
- Maintenance and repair must be performed by trained service personnel only. Improper maintenance would not only damage the machine, but also may present a danger to the exerciser.
- Keep this product out of use until maintenance is completed.
- If you need to remove the cover for repair or maintenance, be sure to contact the service station or dealer to deal with, do not operate on their own.

## MAINTENANCE Error Messages

The window will show the error message when an unusual situation occurs on the machine.
(Shown as illustration below, X is for the main code, Y is for the secondary code.)

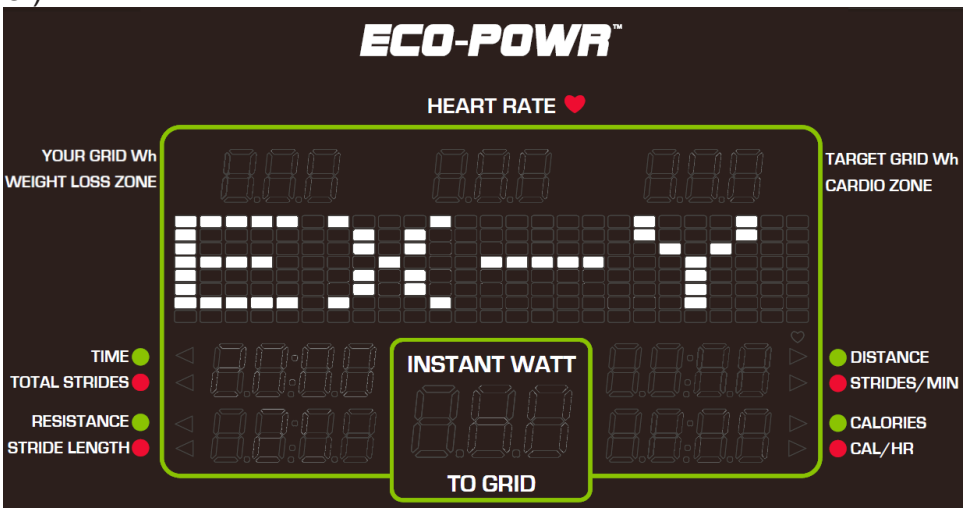


Error Code Description:

| Main Code X | Secondary Code Y | Error message | Note |
|---|---|---|---|
| 1 | 1 | System boot error. | |
| 1 | 6 | | |
| 2 | 1 | IGBT`s current is overloaded. (DC bus Overcurrent) | |
| 2 | 2 | IGBT`s temperature is too high. | |
| 3 | 1 | The AC power supply is failure or the booting time is too short after shut down. (The situations above are called ISLANDING) | |
| 3 | 2 | AC power supply is failure in voltage. | |
| 3 | 3 | AC power supply is failure in frequency. | |
| 3 | 4 | AC reference error. | |
| 3 | 5 | AC grounded failure. | |

## Error Messages (Continued)

| Main Code X | Secondary Code Y | Error message | Note |
|---|---|---|---|
| 4 | 3 | DC_BUS`s tension is overloaded. | |
| 5 | 1 | Forced to warm up. | |
| 5 | 2 | Forced to EngStop | |
| 6 | 1 | Generator`s current is overloaded. | |
| 6 | 2 | Generator is failure in voltage | |
| 6 | 3 | Generator`s temperature is too high. | |
| 7 | 1 | L/R stride motor over current or positioning error being detected while the motor is running in exercise mode. | The stride motor stops, but other functions of the elliptical trainer still work. Turn off the main power, switch off the motor and its driver circuit . |
| 7 | 2 | Right stride length error | The “SELECT PROGRAM” screen will show ERROR_7_4 when detecting abnormal situations on L/R stride motor. |
| 7 | 3 | Left stride length error | |
| 7 | 4 | L/R stride motor abnormality being detected when power on. | |
| 8 | 1 | When start up, communication with the drive board is abnormal. | Will restore when the communication is back to normal. |
| 8 | 2 | When start up, communication with the driver board is normal, but an abnormality occurs during use. | |

## MAINTENANCE Lubrication

To enter Lubrication function, first you must set the console to the Lubrication state. During Banner mode, the message shows “SELECT A PROGRAM”, press STRIDE ▲ and STRIDE ▼ and STOP keys at the same time for 2 seconds to activate this procedure. Once Lubrication procedure is activated, the stride motor will move to the correct position and the message will display “LUBRICATION”. At this time, it is ready for lubrication. Please follow the lubrication procedure listed on the following page to start lubricating.

Once the lubrication procedure is completed, please follow below instruction to return the stride length to 29”/730mm.

1. When the power is off, pedaling the elliptical to turn on the power.
2. Press and hold the STOP key for 2 seconds to reset.

The lubrication process is now completed.

## MAINTENANCE Lubrication Procedure

(a) Push in at point A, and slide upward to remove the lubrication cover.

(b) Press the stride up key to adjust the stride to its longest point. Note the grease fitting at area B.

(c) Use an automobile grease gun with red lithium grease. Apply the grease to the nozzle on the product.

(d) Put the cover back into place, pushing inward at step 3 and downward at step 4, as shown below. Note that point A provides the best contact surface on the lubrication cover.

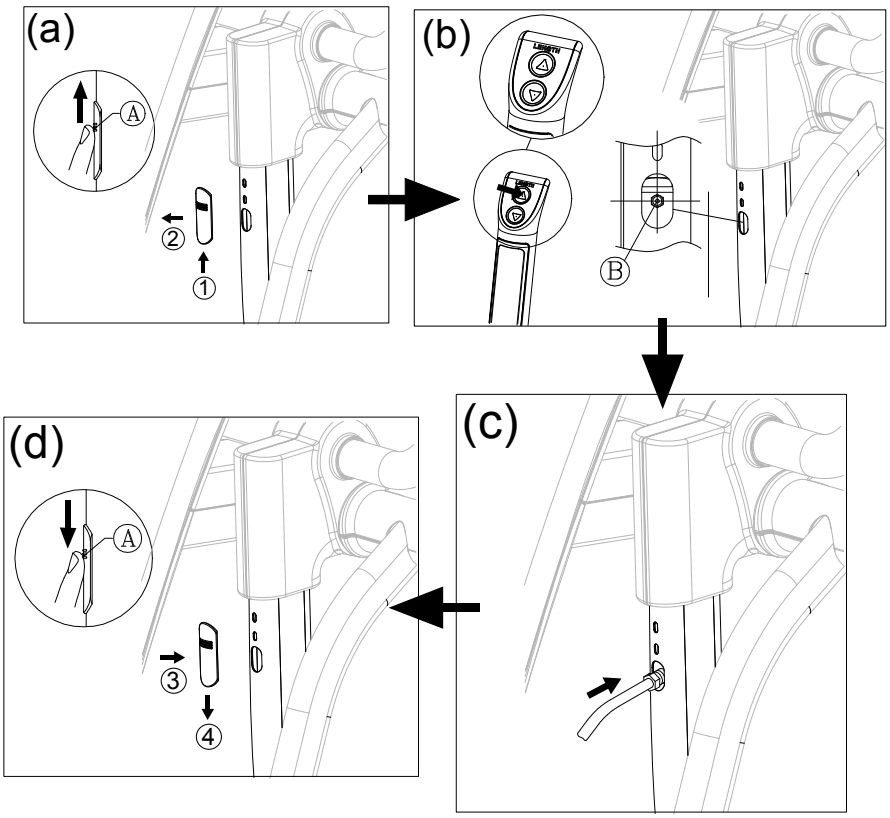

## MAINTENANCE Cleaning the Glide Rails

Follow the steps below to clean left and right glide rails on a daily basis:

(a) Use a clean, lint-free cloth to wipe dust and debris off the glide rails.

(b) Test operate the product to determine where dirt might remain on the glide rails.

(c) Repeat steps (a) and (b) two or three times to ensure smooth movement.

(Note: make sure to use a lint-free cloth)

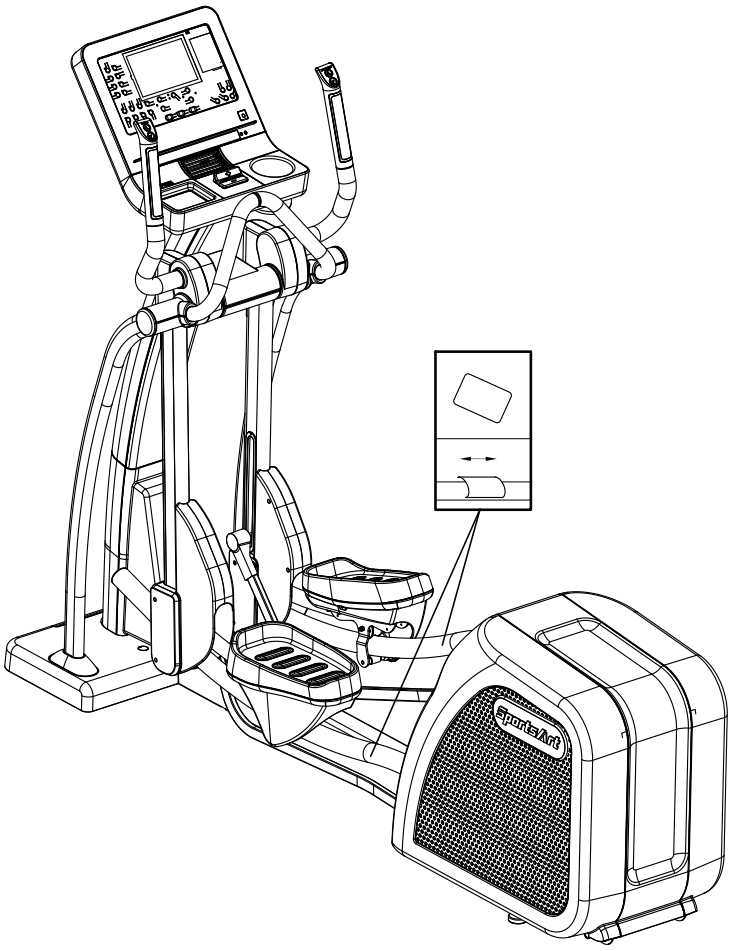

## MAINTENANCE Schedule

| | Area | Day | Week | Month | Quarter | Year | Notes |
|---|---|---|---|---|---|---|---|
| 1 | Exterior | ● | | | | | Clean. |
| 2 | Screws | ● | | | | | Inspect and secure loose parts |
| 3 | Glide rail | ● | | | | | Wipe away dirt and debris. |
| 4 | Rollers | | ● | | | | Apply silicone lubricant.. |
| 5 | Stride motor | | | | | ● | Apply bearing grease |
| 6 | Cushion | | | | | ● | Lubricate with original 66A lubricant. |

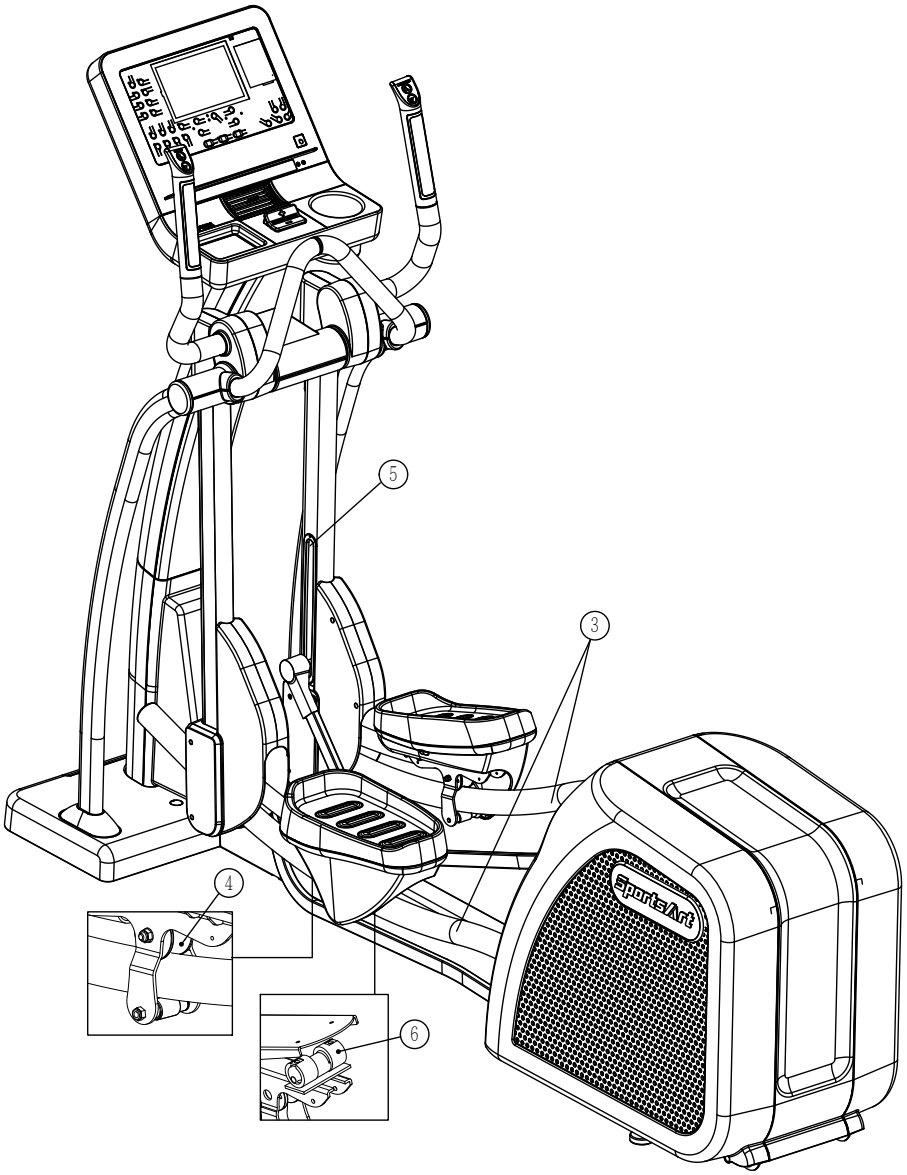

# 11. ACCESSORIES

## ACCESSORIES Standard

**USB CHARGER**

The USB port provides up to 5V, 1A of power for charging.

**CSAFE PORT**

Compatible with CSAFE (Communications Specification for Fitness Equipment) Protocol.
To support MYE Wireless TV Audio_Channel Receiver, and the other equipment that conform to the CSAFE specification.

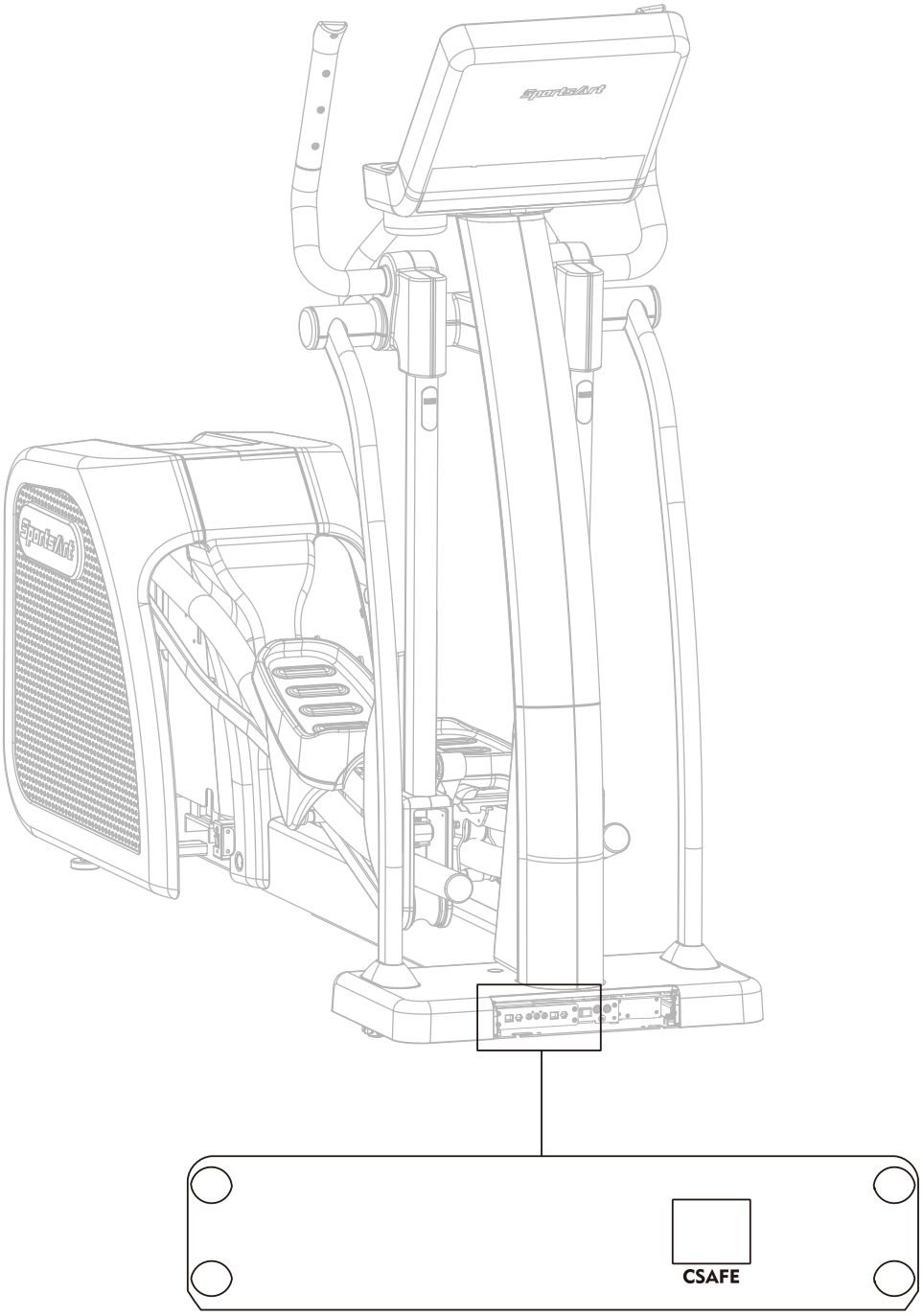

## ACCESSORIES Option

**SA WELL+ Member System**

This is designed specially by SportsArt to assist the user in managing their workout history. There are three ways to get connected with the member site:

1. Using a smartphone, connect to the unit via Bluetooth/WIFI and use the SA WELL+ App. The App is available for download in the App Store and Google Play.
2. Use USB Flash Drive to store the workout data.
3. Manage user information and workout data

Visit “www.gosportsart.com” for more information about this feature.

| No. | Name of button | Function |
|---|---|---|
| a | USB port | This port is used for optional data transferring. |
| b | Bluetooth/WIFI button | When a smart phone is connected wirelessly to the unit, press this button to disconnect. Scan the QR code or tap the NFC tag on the console to connect to the equipment again. |

## ACCESSORIES Option (Continued)

**1: External TV Mount**

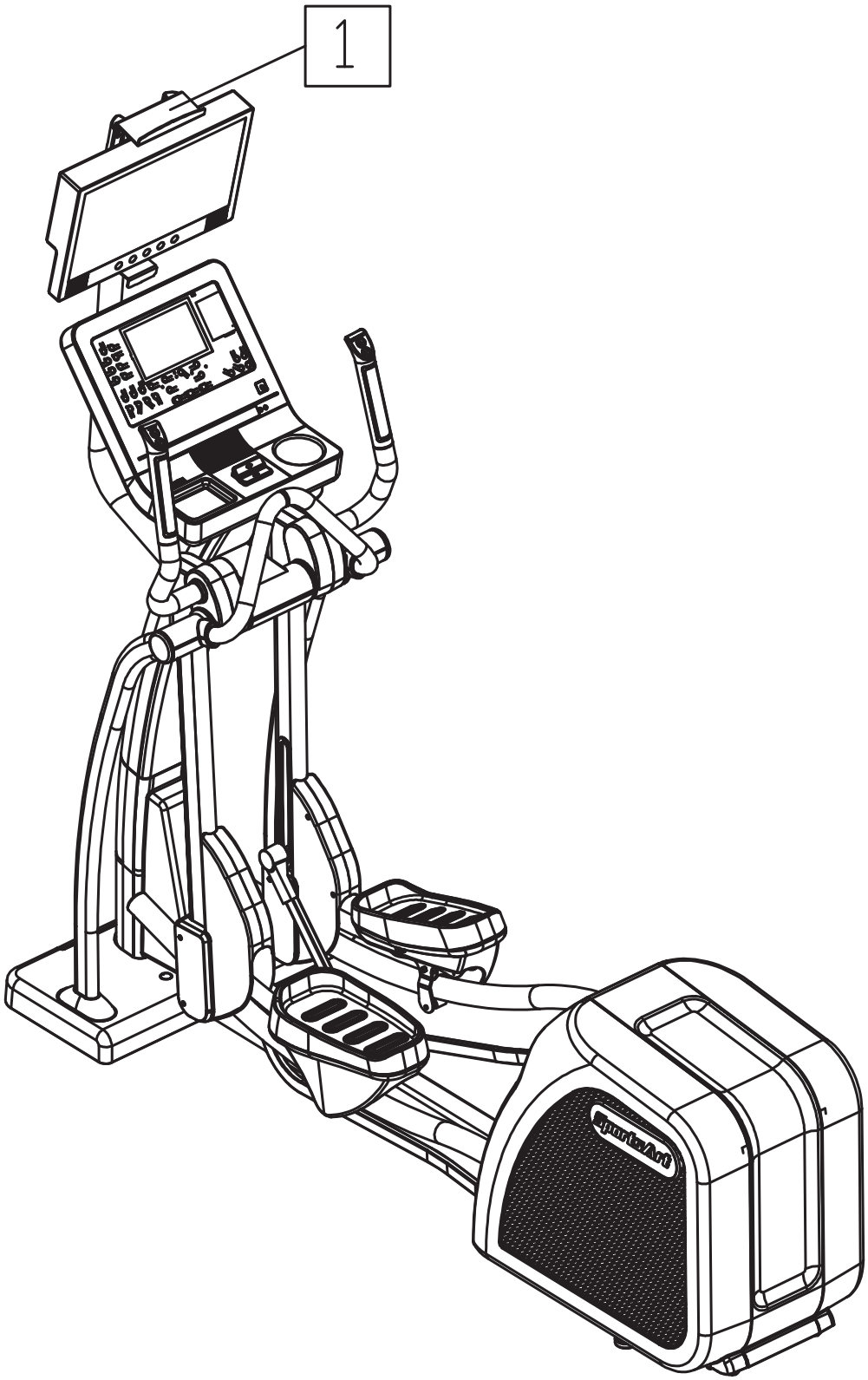

## ACCESSORIES MYE Wireless TV Audio_Channel Receivers

[To purchase, please contact MYE Inc. http://www.myeclubtv.com/]
Multiple TV and audio channels receiving and volume adjustment enabled.

● The following two modules are available for this receiver (to be purchased by client):

1. MC3R-9(900MHZ), which has to be used with a MYE Wireless TV Digital Audio Channel Transmitter MWTD-S9.
2. MC3R-8(863MHZ), which has to be used with a MYE Wireless TV Digital Audio Channel transmitter MWTD-S8.

Choose a suitable module according to country of location. (Please contact
MYE Inc. for detail specification and technical information)
For example: Wireless TV transmission frequency in America is 900MHZ. Wireless TV transmission frequency in Europe is mostly 863MHZ (or nomi nally 800MHZ).

● Operation instruction: Turn off unit power, plug the receiver into the CSAFE port located at left of display and then turn on the power.

● The VOLUME +/- keys and CHANNEL ▲/▼ keys will be activated once the receiver is plug into the unit.
Press VOLUME +/- keys to adjust volume settings. The volume setting range is from 0 to 15, with a default setting of 5.
Press CHANNEL ▲/▼ keys to change channel settings. The channel set
ting range is from 1 to 32, with a default setting of 1. The display will show
"CH XX" during setting.

● Note: Do not unplug the receiver from unit before turning off the power to avoid receiver being damaged.

● The following is a schematic diagram of the connection:

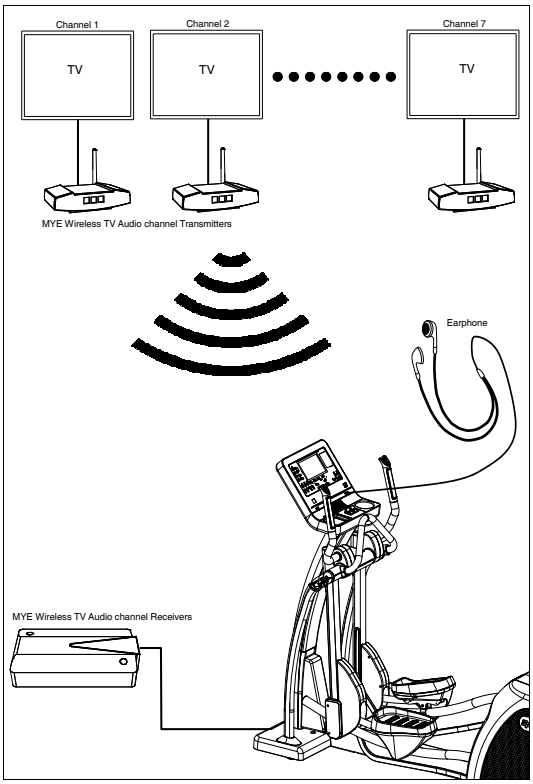

# 12. APPENDIXES

## APPENDIX Specifications

| Model | G876 |
|---|---|
| **Dimensions** | L : 2222 mm (87.5”)<br>W : 670 mm (26.4”)<br>H : 1756 mm (69”) |
| **Overall Weight** | 185 kg (407 lbs) |
| **Maximum User Weight** | 150 kg (330 lbs) |
| **Power Requirement** | 100 – 120 V / 60 Hz<br>(USA)<br>220 – 240 V / 50 Hz<br>(EUROPE) |
| **Circuit Breaker Current Rating** | 110 V : 3A<br>220 V : 3A |
| **Braking System** | Speed-Independent |

# Electronics Block Diagram

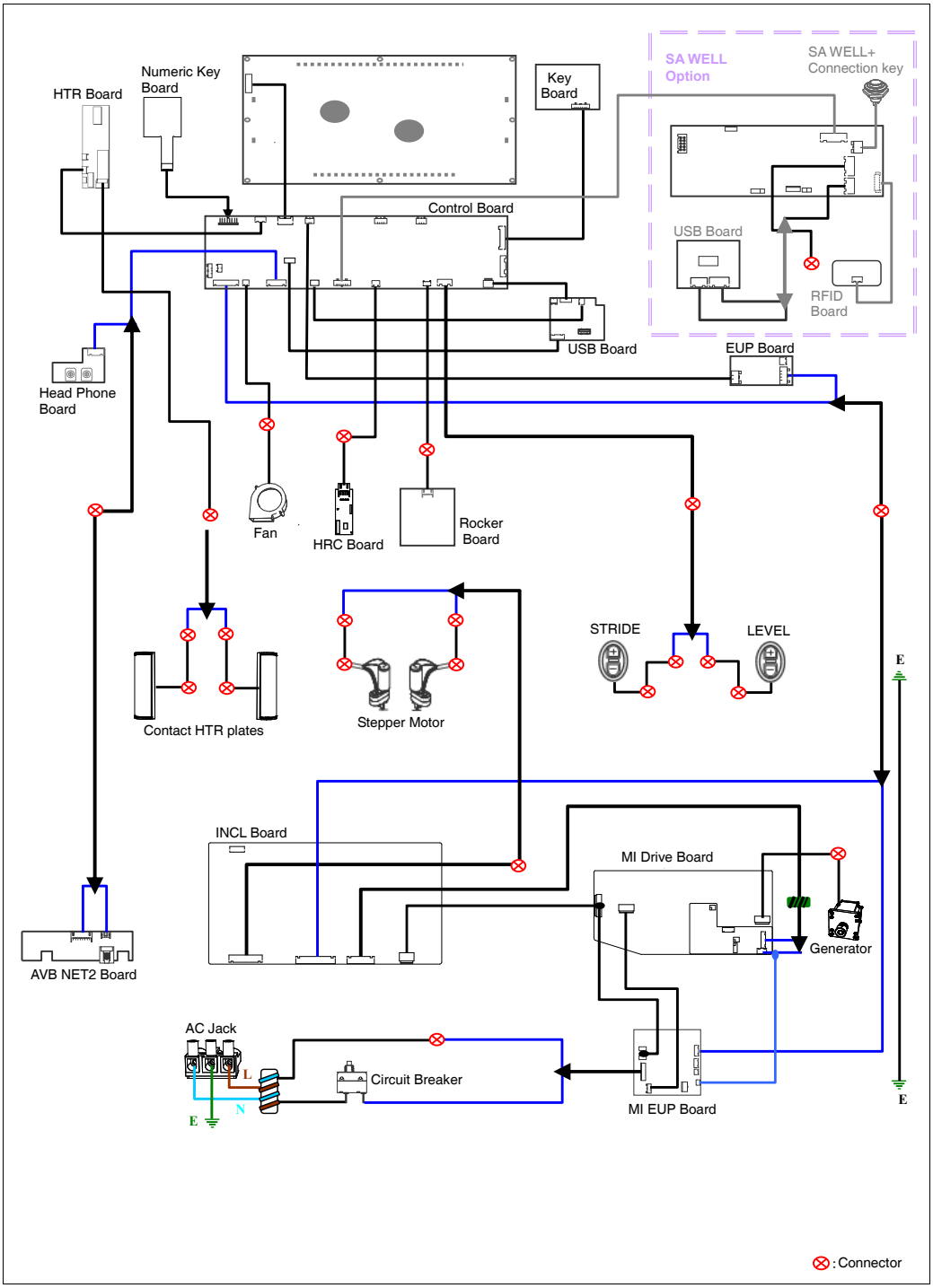

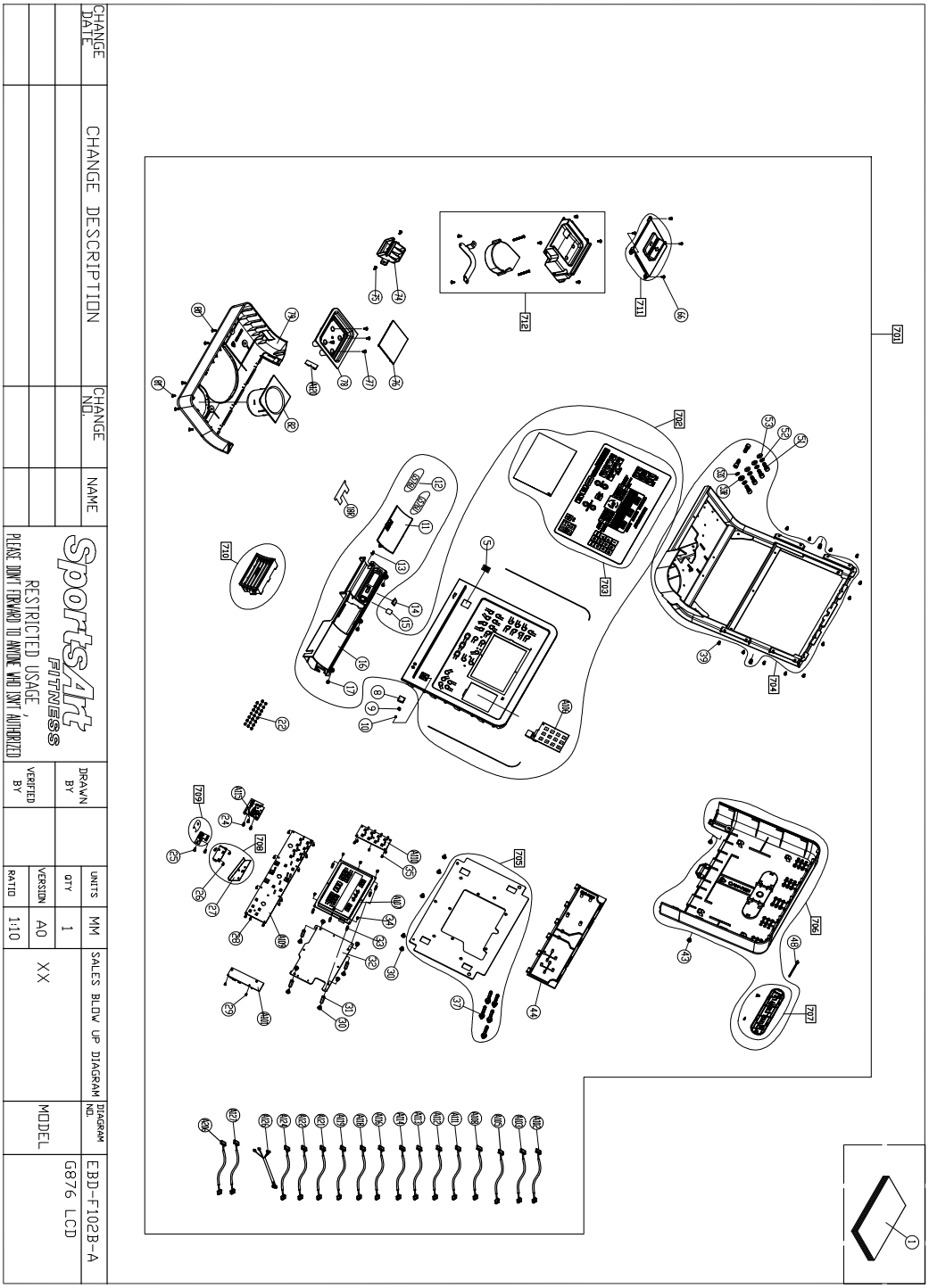
CHANGE DATE
CHANGE DESCRIPTION
CHANGE NO.
NAME
SPORTS ART FITNESS
RESTRICTED USAGE,
PLEASE DONT FORWARD TO ANYONE WHO DONT AUTHORIZED
DRAWN BY
VERIFIED BY
UNITS
MM
QTY
1
VERSION
A0
RATIO
1:10
SALES BLDV UP DIAGRAM
XX
DIAGRAM NO.
MODEL
EBD-F102B-A
G876 LCD

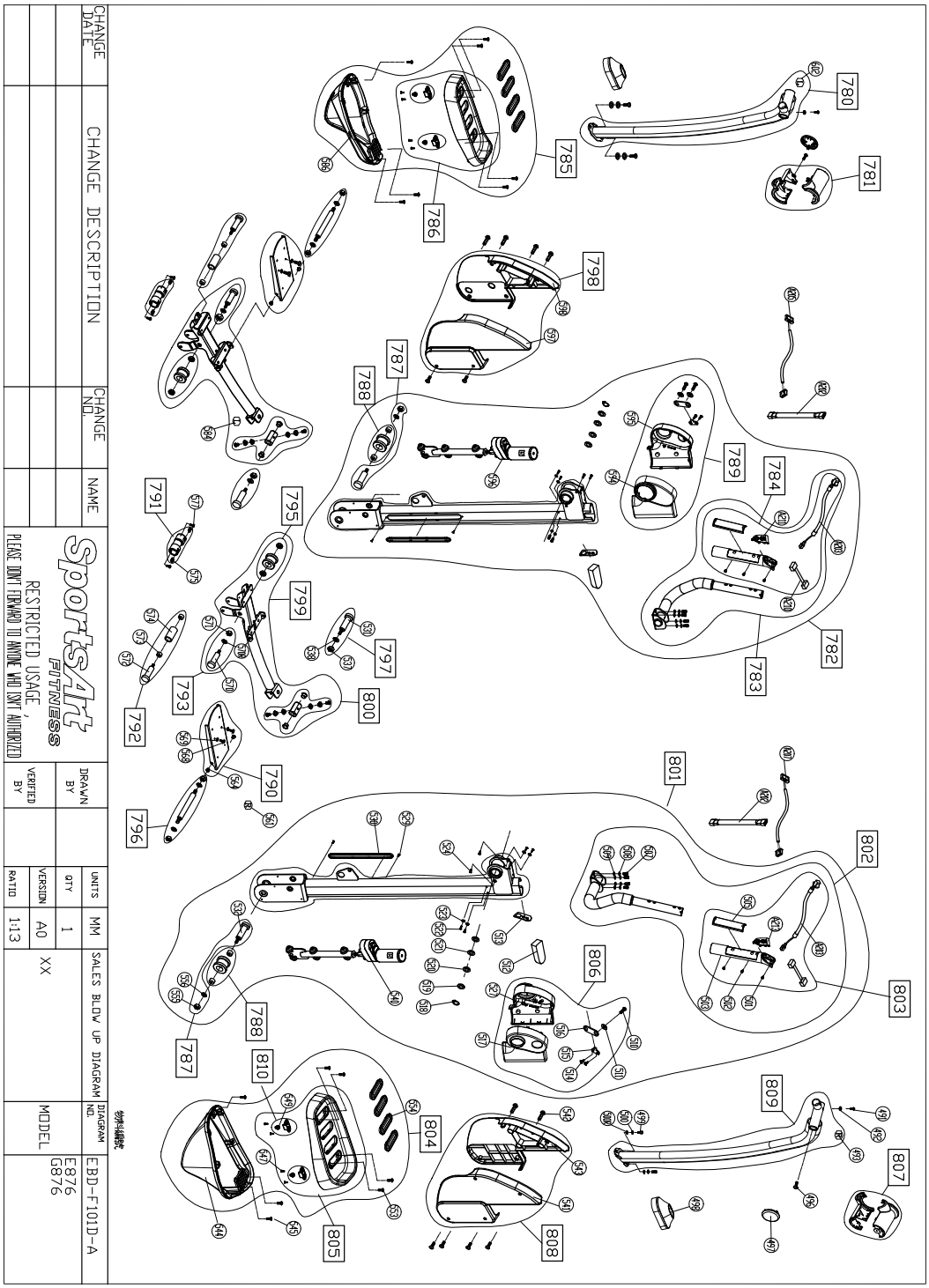
780
781
782
783
784
785
786
787
788
789
790
791
792
793
795
796
797
798
799
800
801
802
803
804
805
806
807
808
809
810
CHANGE DATE
CHANGE DESCRIPTION
CHANGE NO.
NAME
sportsart FITNESS
RESTRICTED USAGE, PLEASE DON'T FORWARD TO ANYONE WHO IS NOT AUTHORIZED
DRAWN BY
VERIFIED BY
UNITS
MM
QTY
1
VERSION
A0
RATIO
1:13
SALES BLOW UP DIAGRAM
XX
DIAGRAM NO.
EBD-F101D-A
MODEL
E876
G876

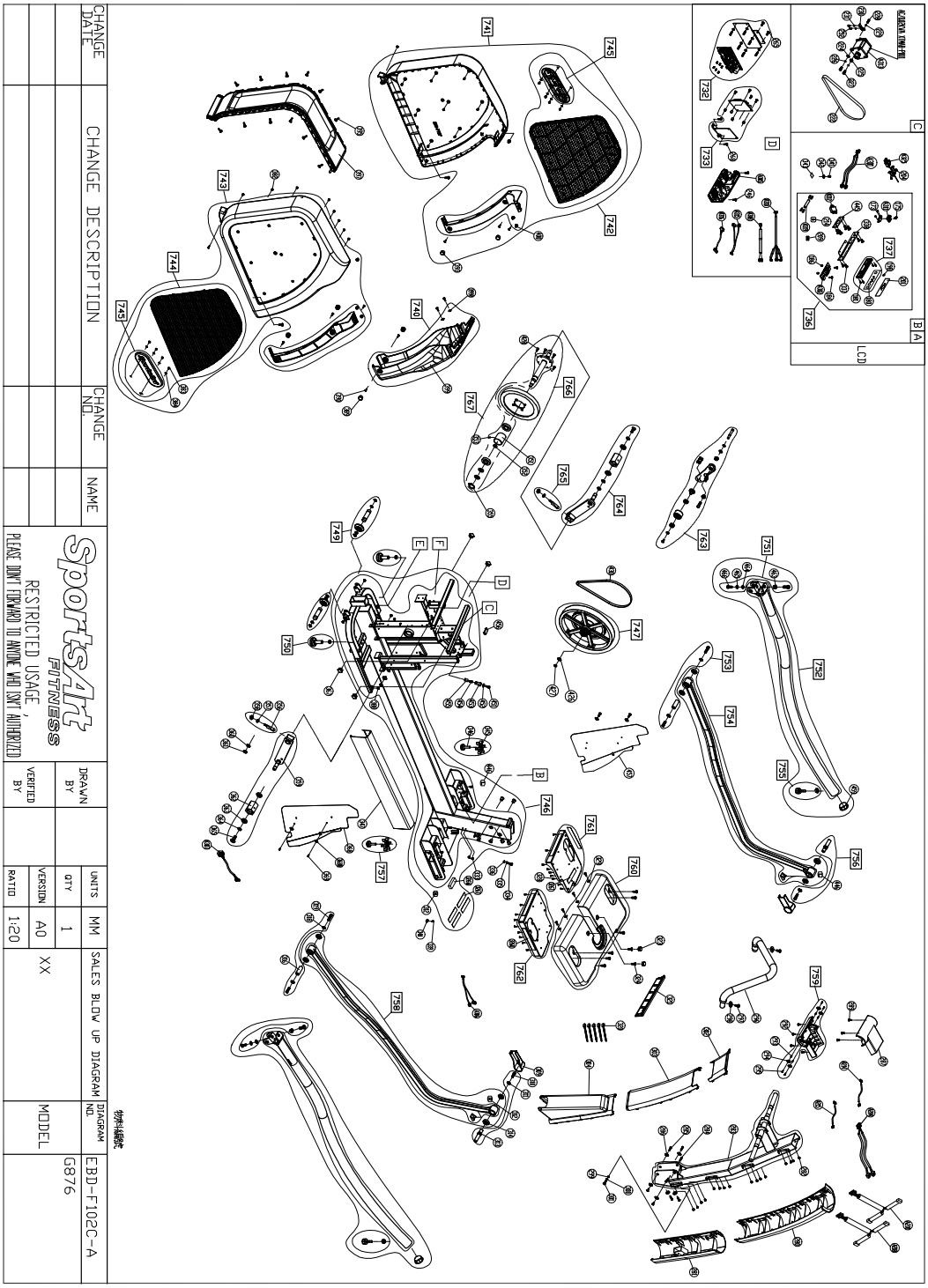
CHANGE DATE
CHANGE DESCRIPTION
CHANGE NO.
NAME
SportsArt FITNESS
RESTRICTED USAGE
PLEASE DON'T FORWARD TO ANYONE WHO ISN'T AUTHORIZED
DRAWN BY
VERIFIED BY
UNITS
MM
QTY
1
VERSION
A0
RATIO
1:20
SALES BLOW UP DIAGRAM
XX
DIAGRAM NO.
MODEL
EBD-F102C-A
G876
AUDIO WIRING
LCD

## APPENDIX Disassembly

(a) Main Frame

(b)Lift Motor Assembly

(c)Front Base Cover

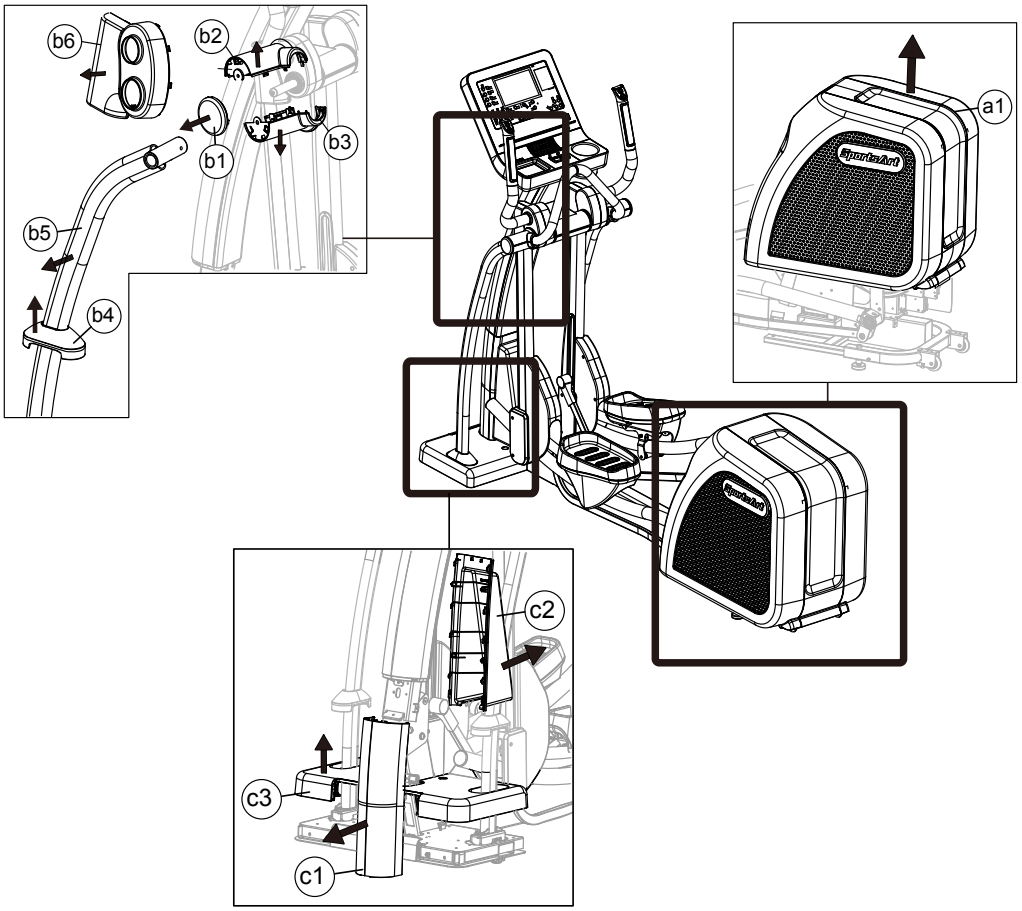

**Your Authorized Distributor**